# The Role of LORAN Timing in Telecommunications

Michael A. Lombardi
National Institute of Standards and Technology
Boulder, Colorado

Chuck Norman
Sprint Nextel
Overland Park, Kansas

William J. Walsh
Motorola, Network Solutions Sector
Arlington Heights, Illinois

**Abstract -** *The telecommunications industry in the United States has performance requirements for time synchronization and frequency control that must be met in order for land and mobile telephone services, wireless networks, and other applications to remain operational. Many of these services now heavily rely upon signals from the Global Positioning System (GPS) satellites as their time and frequency reference source, making them vulnerable to an extended GPS signal outage. This paper describes LORAN's role as a backup or alternative timing reference source to GPS for wired and wireless telecommunications networks. It discusses GPS vulnerabilities and the possible consequence of a prolonged GPS signal outage. It explores how LORAN meets all of the required characteristics of a GPS backup system, not only the requirements for time and frequency performance, but also the requirements for signal coverage area, reliability, national security, and traceability to national and international time standards.*

## 1. Introduction

GPS is the dominant distribution source for time and frequency in the United States and throughout the world, and the telecommunications industry relies heavily on GPS to meet their performance requirements. A GPS disciplined oscillator (GPSDO) can provide time accurate to within 0.1 µs and frequency accurate to about $1 \times 10^{-13}$ after 1 day of averaging [1]. As a result of this excellent performance, many applications and technologies now depend exclusively on GPS as their time and frequency source, and this has raised questions about what would happen to these technologies if GPS were unavailable.

Most would agree that backups and alternatives to GPS are needed to protect the national infrastructure from the consequences of a GPS outage, either from an intentional government decision such as a presidential directive during wartime, from an act of God, or from a terrorist attack. Several comprehensive studies have examined the vulnerability of GPS, the possible consequences of an outage, and the use of LORAN as a GPS backup system [2, 3, 4]. Not surprisingly, these studies are very broad in scope, discussing timing issues only briefly, and focusing most of their attention on the transportation and navigation infrastructure. A 2005 report focused on timing issues, and identified and compared all sources that can potentially supplant and/or support GPS as a reference source for precise time synchronization and frequency control, and concluded that the proposed enhanced LORAN network (eLORAN) was the best available backup provider to GPS [5]. However, that report was limited to examining sources of time and frequency, without examining the requirements of specific applications. This report supplements and enhances [5] by being application oriented, focusing specifically on the role of LORAN timing in the telecommunications industry. It begins by looking at why time and frequency are important in telecommunications, and the type of performance that the industry requires.

## 2. The importance of synchronization in telecommunications and definition of terms

The telecommunications infrastructure of the United States continues to evolve towards becoming a high-speed fully digital environment. Correspondingly, the role played by clocking and synchronization devices to support the digital infrastructure has grown in importance [6]. High accuracy synchronization throughout a network is necessary to

support fast bit rates, to preserve data, and to maximize the use of available bandwidth so that networks can operate at their full capacity. Synchronization failures can cause data to be lost, cause networks to be unreliable or to operate at reduced capacity, or in some cases, to completely fail. In a study completed in 2002, the Network Reliability Steering Committee (NRSC) reported that 9.4% of all telecommunications outages were caused by timing outages [7]. Because the potential consequences of an outage are so serious, both financially and otherwise, telecommunication providers ideally want redundant synchronization sources, so that there is no single point of failure within a network or system.

All digital network elements require synchronization. The synchronization reference for a network is called the primary reference source (PRS) by the American National Standards Institute (ANSI) standard [8], or alternately, a primary reference clock (PRC) by the International Telecommunications Union (ITU) standard [9]. The PRS output is usually fed as a reference input to a Building Integrated Timing Supply (BITS) system, also known by various telecommunications providers as a timing signal generator (TSG), a synchronization supply unit (SSU), or as stand alone synchronization equipment (SASE).

In a synchronous network, all clocks will normally have the same long-term accuracy. For example, in the period prior to the AT&T divestiture of 1984, all the network elements received timing information distributed by the same PRS, and were traceable to this common shared clock. When AT&T operated the United States telephone network, the PRS for the entire system was a cluster of cesium clocks located in Hillsboro, Missouri. The PRS was labeled Stratum 1, and less accurate clocks were in higher numbered strata. Toll switches serviced the long-haul portions of the telephone network and were located in Stratum 2. Local switching offices were located in Stratum 3, with end-user devices in Stratum 4 (Figure 1).

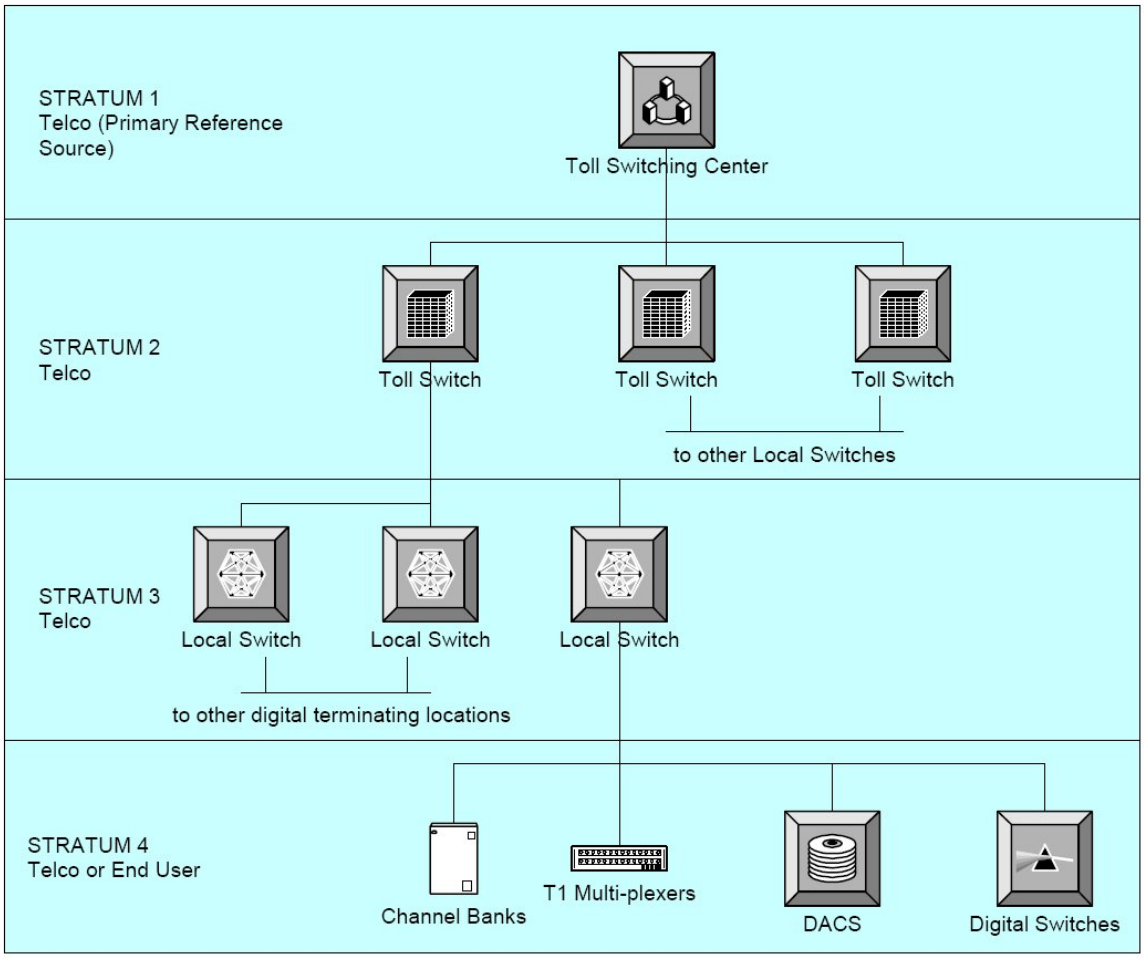


*Figure 1. Telephone network hierarchy for synchronization.*

In this model, the master PRS shown at the top of Figure 1 is the synchronization source or master clock for the entire network, and all other clocks are slaved to the master clock. This was adequate when only one telephone carrier was involved, but did not fit into the post-divestiture telecommunications landscape [10]. When additional carriers were introduced, they had to interconnect and exchange data with each other, making synchronization requirements more complex and more demanding. In the multi-carrier model, each carrier maintains its own PRS, or multiple PRSs. The PRS maintained by one carrier must appear to be synchronized with the PRS units maintained by all of the other carriers with which it interacts, even though there are no synchronization paths and no master-slave timing relationship between carriers (Figure 2). This is called plesiochronous operation, which simply means that it "looks synchronous". It works with a minimal amount of data loss if all carriers maintain PRS sources that stay within narrow frequency tolerances defined with respect to Coordinated Universal Time (UTC).

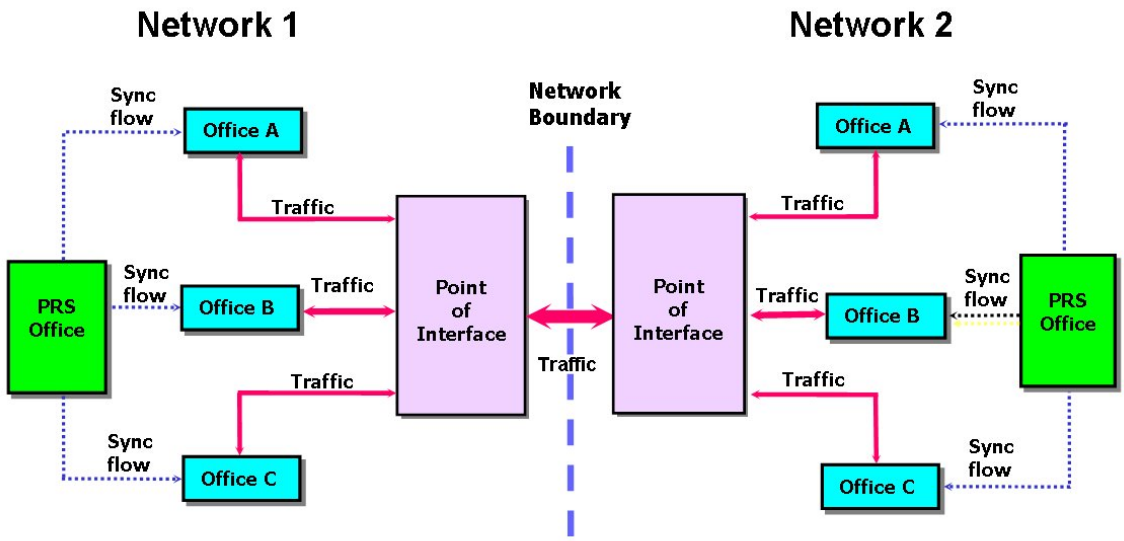


*Figure 2. A plesiochronous connection between two networks that each maintain their own PRS.*

To illustrate this, consider the traffic exchanged in Figure 2 to be a T1 connection between two different carriers. The North American DS1/T1 standard for telecommunications consists of a digital data stream clocked at a frequency of 1.544 MHz. This data stream is divided into 24 voice channels, each with 64 kHz of bandwidth. Each voice channel is sampled 8000 times per second. When the time difference between the two PRS units exceeds the period of the sampling rate, a cycle or frame slip occurs. This results in loss of data, noise on the line, or in some cases, a dropped call. The slip rate, *SR*, can be calculated as:

$$SR = \frac{T_{samp}}{F_{diff}}$$

where $T_{samp}$ is the period of the sampling rate (a constant for T1 of 125 µs), and $F_{diff}$ is the frequency difference between PRS A and PRS B. If PRS A is high in frequency with respect to UTC by $+1 \times 10^{-11}$ and PRS B is low in frequency by $-1 \times 10^{-11}$, then the interval between slips is:

$$SR = \frac{125 \times 10^{-6} s}{2 \times 10^{-11}} = 6250000\ s = 72.3 \text{ days}$$

Figure 3 depicts a slip as an accumulated time or phase error. Here the unit interval is equal to the period of the T1 bit frequency, or 647.7 ns. A slip occurs when a complete T1 frame (193 bits) has been lost (647.7 ns × 193 = 125 µs, the period of the 8 kHz sampling rate) Even if one PRS were "perfect", the frequency error in the other PRS would eventually cause a slip, and thus all carriers must maintain good synchronization. Because DS1/T1 system relies on plesiochronous connections, it is technically known as the *plesiochronous digital hierarchy* or PDH.

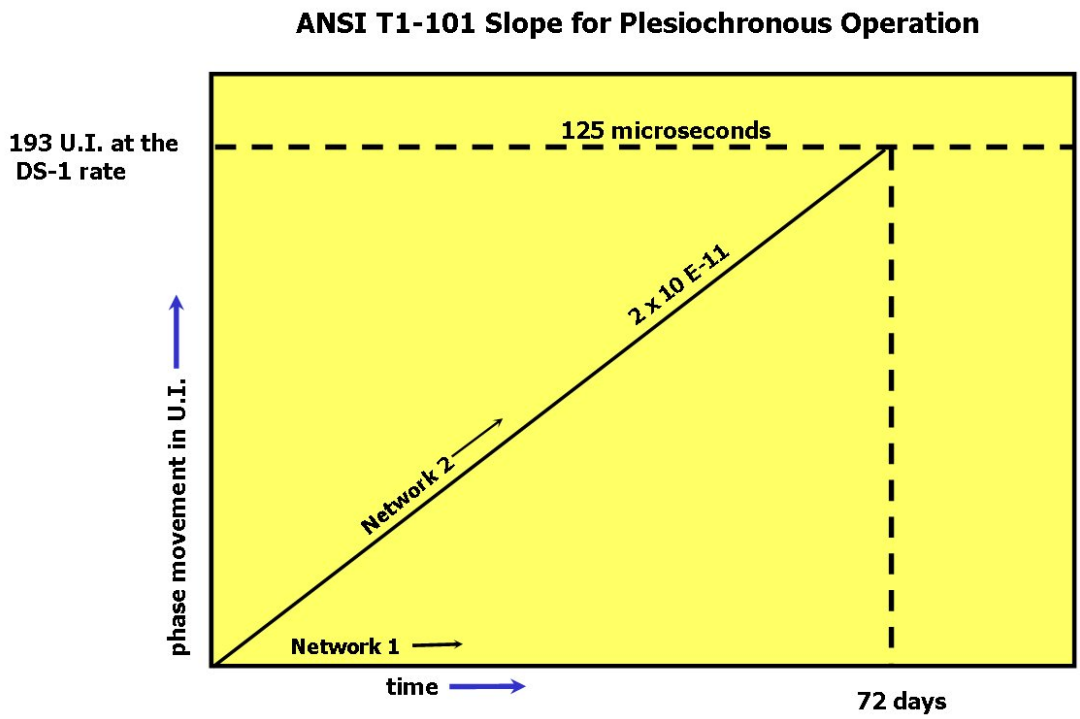


*Figure 3. A accumulated phase error of 125 µs results in a slip.*

## 3. Performance requirements for time and frequency in the T-carrier system

One slip every 72 days is considered acceptable network performance for the T-carrier system that limits the number of problems to a manageable level. Thus, the ANSI T1.101 [8] defines a PRS as:

> *Equipment that provides a timing signal whose long-term accuracy is maintained at $1 \times 10^{-11}$ or better with verification to Coordinated Universal Time (UTC), and whose timing signal is used as the basis of reference for the control of other clocks within a network.*

The definition tells us that a PRS must meet two requirements: an accuracy requirement of $1 \times 10^{-11}$, and a requirement of being verifiably traceable to UTC. The accuracy requirement is equivalent to Stratum 1 (ST1) as defined by both ANSI and ITU [8, 9]. A number of other stratum levels have been defined by various organizations, and the specifications and slip intervals of several are summarized in Table 1.

*Table 1. Stratum timing requirements for clocks in telecommunication networks.*

| Stratum Levels | Stratum 1 | Stratum 2 | Stratum 3E | Stratum 3 |
|---|---|---|---|---|
| Frequency accuracy, adjustment range | $1 \times 10^{-11}$ | $1.6 \times 10^{-8}$ | $1 \times 10^{-6}$ | $4.6 \times 10^{-6}$ |
| Frequency stability | NA | $1 \times 10^{-10}$ | $1 \times 10^{-8}$ | $3.7 \times 10^{-7}$ |
| Pull-in range | NA | $1.6 \times 10^{-8}$ | $4.6 \times 10^{-6}$ | $4.6 \times 10^{-6}$ |
| Time offset per day due to frequency instability | 0.864 µs | 8.64 µs | 864 µs | 32 ms |
| DS1/T1 Slip Interval | 72.3 days | 7.2 days | 104 minutes | 169 s |

The stratum hierarchy classifies clocks based on their frequency accuracy, which translates directly into time accuracy with respect to other clocks in the network. ST1 clocks are defined as autonomous timing sources. This means that they require no input from other clocks, other than perhaps a periodic calibration. Clocks at levels lower than ST1 require input and adjustment from a network clock at a higher stratum. The "pull-in range" determines what type of input accuracy is required to synchronize the clock. For example, a "pull-in-range" of $\pm 4 \times 10^{-6}$ means that the clock can be synchronized by another clock with that level of accuracy.

### 3.1 Requirements for wireless telephone networks

Code division multiple access (CDMA) systems have the most stringent synchronization requirements (summarized in Table 2) amongst the various types of wireless telephone networks. CDMA networks comply with strict synchronization standards [11, 12] that require all base stations except repeaters to be synchronized to within ±3 µs, and for all base stations that support multiple simultaneous CDMA channels to be within ±1 µs. The time requirement is ±10 µs, even if the external source of CDMA system time is disconnected. To meet these requirements, CDMA system time is nearly always obtained from GPS (more than 100,000 CDMA base stations are GPS equipped in North America). The frequency requirement is $5 \times 10^{-8}$ for the transmitter carrier frequency, but the carrier frequency is normally referenced to the same GPSDO that produces the time reference, and is usually much better than the specification.

*Table 2. CDMA time and frequency requirements.*

| Specification | Section in CDMA standard [12] | Requirement |
|---|---|---|
| Transmit Carrier Frequency Accuracy | 4.1.2.3 | For all operating temperatures specified by the manufacturer, the average frequency difference between the actual CDMA carrier frequency and specified CDMA transmit frequency assignment *shall* be less than $\pm 5 \times 10^{-8}$ (±0.05 ppm). |
| Timing Reference Source | 4.2.1.1 | Each base station *shall* use a time base reference from which all time-critical CDMA transmissions, including pilot PN sequences, frames, and Walsh functions, shall be derived. The time base reference shall be time-aligned to CDMA System Time.<br><br>Reliable external means *should* be provided at each base station to synchronize each base station time base reference to CDMA System Time. Each base station should use a frequency reference with sufficient accuracy to maintain time alignment to CDMA System Time. |
| Timing Reference Tolerance | 4.2.1.1.3 | For all base stations except repeaters, the pilot time alignment error *should* be less than 3 µs and *shall* be less than 10 µs.<br><br>In the case of base station repeaters, the difference in the pilot time alignment error between the output of the remote base station and the output of the base station repeater *shall* be less than 5 µs.<br><br>For base stations supporting multiple simultaneous CDMA Channels, the pilot time tolerance of all CDMA channels radiated by a base station *shall* be within ±1 µs of each other. |
| Holdover | 4.2.1.1 | With the external source of CDMA System Time disconnected, the base station *shall* maintain transmit timing within ±10 µs of CDMA System Time for a period of not less than 8 hours. |

Although not currently as common as CDMA in the United States, the Global System for Mobile Communications (GSM) is the most popular standard for mobile phones in the world, with over one billion subscribers in more than 200 countries. GSM is a time division multiple access (TDMA) technology that divides a radio frequency into time slots and then allocates slots to multiple calls. Unlike CDMA, GSM has no synchronization requirement, but it does have the same frequency accuracy requirement of $\pm 5 \times 10^{-8}$ [13].

### 3.2 The dominant role of GPS as a PRS

GPS is a superb technology that works worldwide, and it is easy to see why telecommunication providers rely on it so heavily. GPS disciplined oscillators easily meets the PRS, ST1, and CDMA requirements described above. Due to problems of frequency drift and aging, these requirements are impossible to meet with standalone quartz oscillators, and difficult to meet with rubidium oscillators without periodic adjustments. Cesium oscillators will of course meet the requirements, but they are too costly for widespread deployment (more on this in Section 7). The chief concern with using GPS is not its cost or its performance, but rather its vulnerabilities to certain types of failures. These vulnerabilities are discussed in Section 4.

## 4. GPS vulnerabilities

When radio timing signals such as GPS or LORAN are used as a PRS, the output from the receiver is fed as a reference input to the BITS/TSG/SSU/SASE unit. The BITS unit has holdover capability that can continue to maintain ST1 synchronization for a period of time if GPS reception is lost. The holdover capability is provided by either by a free running local oscillator, or a local oscillator that is steered with software that retains knowledge of its past performance. The GPS vulnerabilities described in Sections 4.1 to 4.2 below are generally not serious if the BITS unit has a well designed holdover mode. The vulnerabilities described in Sections 4.3 to 4.5 are potentially more serious and cannot always be solved by holdover capability.

### 4.1 Obstructed Sky View

GPS is a line-of-sight system that works poorly indoors. For best results, the antenna requires an unobstructed view of the sky. If not, there will be intervals when the receiver is unlocked and has to rely on its holdover capability. During short outages, the holdover capability can often meet the synchronization requirements. In fact, some GPS PRS devices use “through-wall” or “through-the-window” antenna arrangements designed with the knowledge that even though satellites might not always be visible, the holdover capability will be good enough to keep everything running smoothly.

### 4.2 Local Outages

The GPS receiver output may become invalid for various reasons, ranging from human error such as a technician leaving a cable disconnected, equipment failures, vandalism, or an act of God in the form of a lightning strike. These types of failures normally affect only a limited area of a network, and the holdover performance is often good enough to keep the BITS unit operational while the GPS hardware awaits repair.

### 4.3 Government Directives

The United States government reserves the right to disable GPS in the event of a national emergency. Because GPS has so many commercial, industrial, and government applications, it seems likely that this action would be taken only after great deliberation, and that any such outage would be made as brief as possible. In fact, one goal of the 2004 Presidential directive is to “improve capabilities to deny hostile use of any space-based positioning, navigation, and timing services, without unduly disrupting civil and commercial access to civil positioning, navigation, and timing services ...” [14]. Even so, telecommunication providers need to be aware that there is always the possibility, however remote, of an extended GPS outage by government directive during a national emergency or time of crisis.

### 4.4 RF interference and jamming

The main reason that GPS is susceptible to interference is the low power of the signal. A receiver can lose lock on a satellite due to an interfering signal that is only a few orders of magnitude more powerful than the minimum received GPS signal strength, which is –160 dBW on earth for the L1 carrier, equivalent to $10^{-16}$ W [15]. Unintentional interference with GPS receivers has been documented from a number of sources that produce unwanted signal power in the L1 band. These include television channels 23, 66, and 67, the Mobile Satellite Service (MSS), ultra wideband (UWB) communications, over-the-horizon (OTH) radar, and personal electronic devices such as cell phones [2]. In some cases, this interference is produced by radio transmitters that have every right to be on the air, and occasionally, a GPS receiver simply can’t be made to work in a given area. For example, one telecommunications provider reports

relocating a cellular base station located near a channel 66 television transmitter, with an audio carrier near 787.75 MHz. The second harmonic of this frequency interfered with the GPS L1 carrier centered on 1575.42 MHz.

Intentional interference, or jamming, is a well documented problem and of much greater concern. Obviously, the United States government will make every effort to prevent it, and to find the interfering source [14]. However, it is well known to the military community that GPS can be jammed, that jamming devices and techniques are available over the Internet, and that disrupting military and civil GPS applications can be attractive to malicious governments and groups. It is estimated that an airborne, low power (1 W) jammer could deny the tracking of satellites to a previously locked GPS receiver at a distance of 10 km, and could prevent a receiver from acquiring lock at a distance of 85 km. Such a jammer could cost less than $1000 to build. More sophisticated jammers that reproduce the same type of spread spectrum signals as GPS could prevent signal acquisition for a distance of over 1000 km, and would be difficult to detect with conventional methods of spectrum analysis [2]. Obviously, a prolonged period of uninterrupted jamming would have serious consequences for a telecommunications network that relied exclusively on GPS.

### 4.5 Spoofing

Spoofing is a technique intended to cause a GPS receiver to lock on false signals that appear to be legitimate. The receiver will then produce false results, but will appear to the end user to be working properly, so no corrective action will be immediately taken. Spoofing is an even more insidious problem than jamming, but is more difficult to achieve, and less likely to occur [2]. However, it could wreak havoc within a telecommunications system that relies exclusively on GPS.

## 5. The consequences of a GPS signal outage

The consequences of a GPS signal outage for both wired and wireless networks are described in this section.

### 5.1 Wired Networks

A short GPS outage has little impact on a wired network if good holdover mechanisms are in place. Of course, the longer the outage, the more serious the consequence, as slip rates will gradually increase. However, ST1 might be maintainable for about a day, with a quartz based GPSDO, and perhaps for about three weeks with a rubidium based GPSDO. During the initial period following an outage, the impact on voice services will be an increasing rate of "clicks and pops" related to slips, and data applications involving modems and fax machines may "slow down" because errors caused by slips can force packets to be retransmitted. However, it is quite possible that customers will not be aware of any significant problems for as long as three weeks if the network has been carefully designed for holdover.

### 5.2 Wireless Networks

Some wireless networks, particularly the CDMA system used for mobile telephone calls, rely on accurate time information as well as accurate frequency. There are numerous types of CDMA systems, but most are backward compatible with the *TIA/EIA 95-B* standard [11] and have the same specifications for time and frequency as outlined in Section 3.2.

CDMA base stations identify themselves via a time offset, and their clocks need to be synchronized to a common time reference. Synchronization to a common time reference allows CDMA technology to provide a nearly seamless handover of a mobile phone from one base station to another. The base stations can operate in the same RF channel because they can be identified by a spread spectrum psuedo random noise (PRN) code. A single PRN code (actually two, one for the “I” channel and one for the “Q” channel) is used by all base stations. This works because each base station offsets the start of the code by a different time interval with respect to the common time reference established via GPS.

When GPS is available, base stations are typically synchronized to within 1 μs or better with respect to each other. When GPS is unavailable, the standard [11, 12] calls for the holdover capability to be good enough to keep the base station clock accurate to within ±10 μs for an interval arbitrarily determined to be anywhere between 8 hours and one day. When the time alignment does drift somewhere beyond the ±10 μs limit the ability to support soft-handoff will fail, the carrier-to-noise ratio will suffer, and poor pilot assignments will likely occur. In short, mobile phone performance will significantly degrade when synchronization is lost. In reality, however, the actual problems might not begin at exactly the 10 μs limit, as sometimes a larger time error can be tolerated before a base station fails. For example, if the required time difference between two base stations in an overlapping coverage area is 64 μs, then an

error of half this difference; or up to 32 µs can be tolerated before the two base stations "collide". Thus, a PRS with a holdover capability of $1 \times 10^{-10}$, one order of magnitude worse than ST1, might be able to keep a base station operational for almost three days without GPS.

## 6. LORAN as a PRS in a telecommunications network

As described in the examples given in Section 5, a network that has had good synchronization holdover incorporated into its design can probably remain operational (albeit at reduced performance) for at least a day and perhaps for weeks without GPS reception. However, in the event of a long or "permanent" GPS outage, or in the event that the GPS signal was being spoofed, the holdover capability would fail, and the only solution for telecommunications providers is to employ a redundant PRS technology. This section describes how LORAN meets ST1 PRS requirements, and how LORAN can and has served as a PRS in both wired and wireless networks.

This section makes a distinction between legacy LORAN, which is the preexisting LORAN-C network, and eLORAN, a modernized version of the preexisting network that features signals with improved timing capability. eLORAN features improved time and frequency control at each transmitter, with each site maintaining an ensemble of three cesium oscillators. eLORAN also has a new modulated pulse used to send additional data to receivers. This modulated pulse is added 1 millisecond after the 8$^{th}$ pulse on secondary stations, and between the existing 8$^{th}$ and 9$^{th}$ pulses on master stations, and is used to generate the LORAN Data Channel (LDC). The LDC enables all-in-view processing (rather than chain processing used in legacy LORAN), and delivers information to receivers that includes time-of-day, leap second information, differential corrections, and network health and status information (Table 3). The 120-bit LDC message is sent at a rate of five bits per Group Repetition Interval (GRI), requiring 24 GRIs, or a maximum of 2.38 s to transmit [16,17]. Pending government approval, all 29 North American transmitters will have eLORAN capability. Legacy LORAN receivers will continue to work as before with signals from stations modernized for eLORAN, but they will be unable to decode the LDC or utilize any other new features.

*Table 3. Time and differential correction messages contained in LORAN data channel (LDC)*

| Time Message | Number of Bits | Resolution | Range |
|---|---|---|---|
| MSG Type | 4 | | 16 |
| Time and Date | 31 | 1 message epoch | 97 to 163 years |
| Leap Seconds | 6 | | 64 |
| Next leap second | 1 | | |
| Station ID | 3 | | 8 |
| Total Time Message | 45 | | |

| Differential Message | Number of Bits | Resolution | Range |
|---|---|---|---|
| Message Type | 4 | | 16 |
| Time Base Quality | 3 | | |
| Reference ID | 10 | | 1024 |
| Signal ID | 3 | 2 | 16 |
| Correction #1 | 10 | 2 ns | ± 1.022 µs |
| Correction #2 | 10 | 2 ns | ± 1.022 µs |
| Age/Quality | 5 | | |
| Total | 45 | | |

### 6.1 LORAN as a frequency source

Legacy LORAN has been successfully used for many years as a frequency reference that easily meets ST1 PRS requirements. This is evidenced in Figure 4, which shows a two year phase comparison between the signals from the LORAN transmitter located at Boise City, Oklahoma (9610-M) as received in Boulder, Colorado, and UTC(NIST). Boise City is the closest LORAN station to Boulder, located about 432 km away. Frequency accuracy is computed as $\Delta t / T$ from the slope of the phase (shown as a red line on the graph), and is calculated as $4 \times 10^{-15}$ over the two year period.

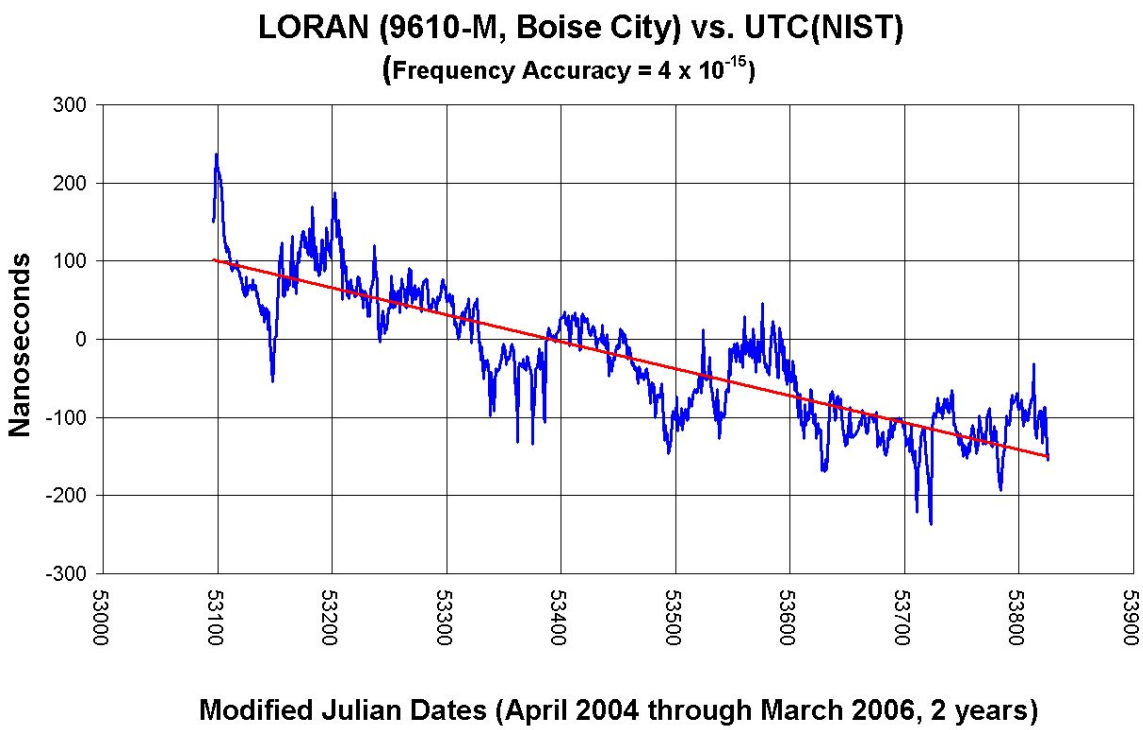


*Figure 4. Two year phase comparison between LORAN 9610-M and UTC(NIST).*

Frequency accuracy over a shorter interval is limited by the frequency stability, which can be estimated with the Allan deviation, $\sigma_y(\tau)$ [18]. Figure 5 shows the frequency stability of the data presented in Figure 4, for averaging times ranging from 1 day to 30 days. Frequency stability after 1 day of averaging is about $3 \times 10^{-13}$, or more than 30 times better than the PRS ST1 requirement. After 5 days, stability drops below $1 \times 10^{-13}$, exceeding the PRS ST1 requirement by a factor of 100.

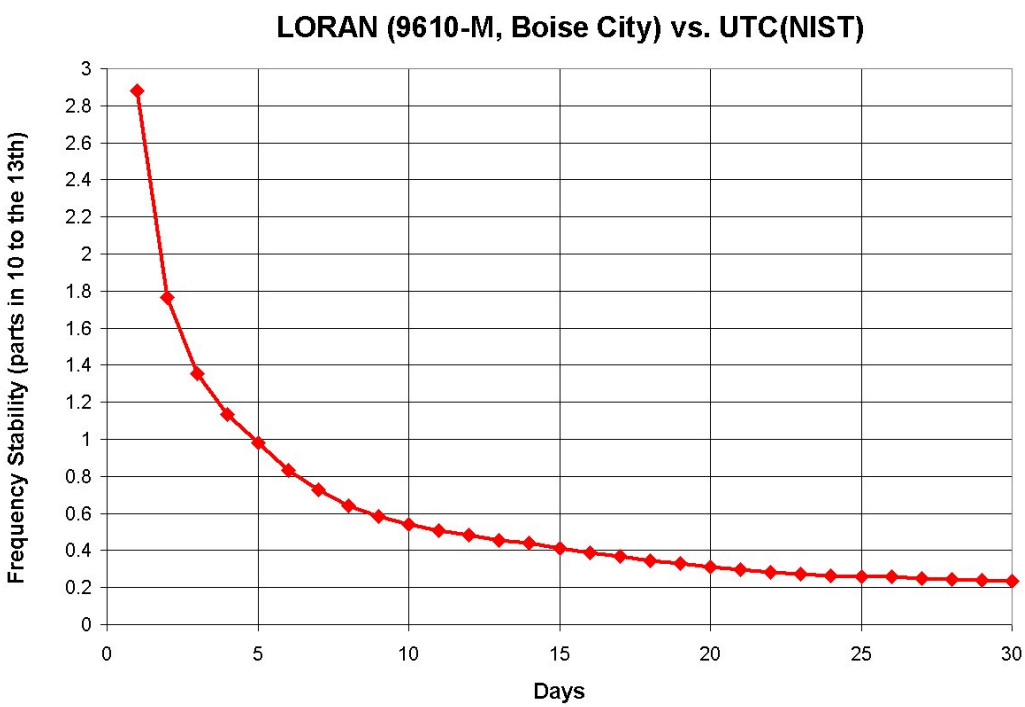


*Figure 5. Frequency stability of LORAN 9610-M signals for averaging times ranging from 1 to 30 days.*

These results show that legacy LORAN can easily meet ST1 PRS requirements, and preliminary tests have shown that eLORAN will provide even better frequency performance. The short-term frequency stability of eLORAN is equivalent to legacy LORAN, but the differential corrections supplied from local monitoring sites will improve frequency stability at averaging times of 1 day or longer by removing the long-term phase changes caused by seasonal propagation effects [5]. Long-term frequency accuracy will also improve due to tighter frequency control of the cesium oscillators at each transmitter site.

Figure 6 shows a dual PRS configuration used by a major telecommunications provider that utilizes both GPS and legacy LORAN for optimal reliability [19]. This PRS configuration is used at all switching sites and all fiber junctions with three or more fiber routes, providing signal and hardware diversity for the network. The dual PRS feeds a redundant rubidium based Stratum 2 TSG/SSU/BITS with extended holdover characteristics that the provider refers to as Stratum 2E. If either GPS or LORAN is lost, synchronization continues indefinitely with no discernible loss in accuracy. If the entire PRS fails (both GPS and LORAN are lost), near ST1 accuracy is still maintained for 21 days. The cost of the fully redundant LORAN/GPS PRS is about 1/3 the cost of a cesium oscillator.

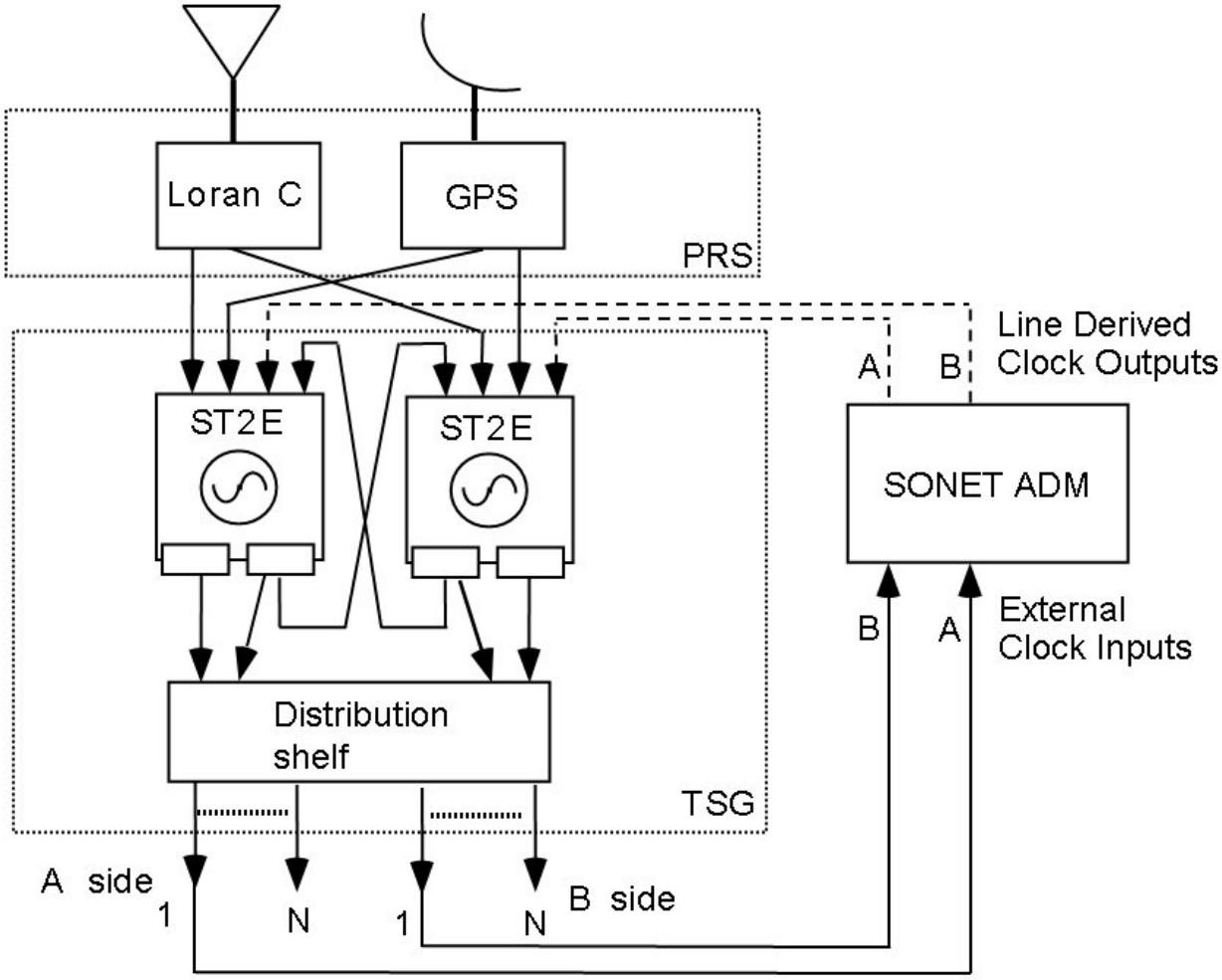


*Figure 6. Dual LORAN/GPS PRS configuration used for optimal reliability.*

**6.2 LORAN as a time source**

Legacy LORAN does not broadcast a time code, but it does allow the receiver to generate an on-time 1 pulse per second (pps) signal that can be used as a synchronization reference. By specification, legacy LORAN signals as transmitted are within 0.1 µs of UTC(USNO) [17] and received time can typically be recovered to well within ±5 µs, half the period of the 100 kHz carrier, by aligning a GRI pulse with the UTC second, a technique known as time of coincidence (TOC). While 1 µs synchronization is possible with legacy LORAN, several factors can change the propagation delay between the transmitter and receiver, and these factors limit the accuracy. They include seasonal

changes in ground conductivity, diurnal phase shifts at sunrise and sunset, and changes in temperature and precipitation due to weather conditions. With legacy LORAN, these path delay changes are not measured and thus no corrections are applied to the transmitted signal. The time accuracy of legacy LORAN was also limited because there was often no way to calibrate a receiver and antenna system or to compensate for the delay biases.

Despite the limitations of legacy LORAN, it proved capable of meeting CDMA timing requirements in a series of experiments conducted in August-September 2002 by Motorola [20]. Measurements comparing UTC as received from both GPS and LORAN were conducted at 12 sites in five states from a mobile platform, with different LORAN master stations used as the synchronization source. The coverage area for these tests, along with the location of the LORAN transmitters, is shown in Figure 7.

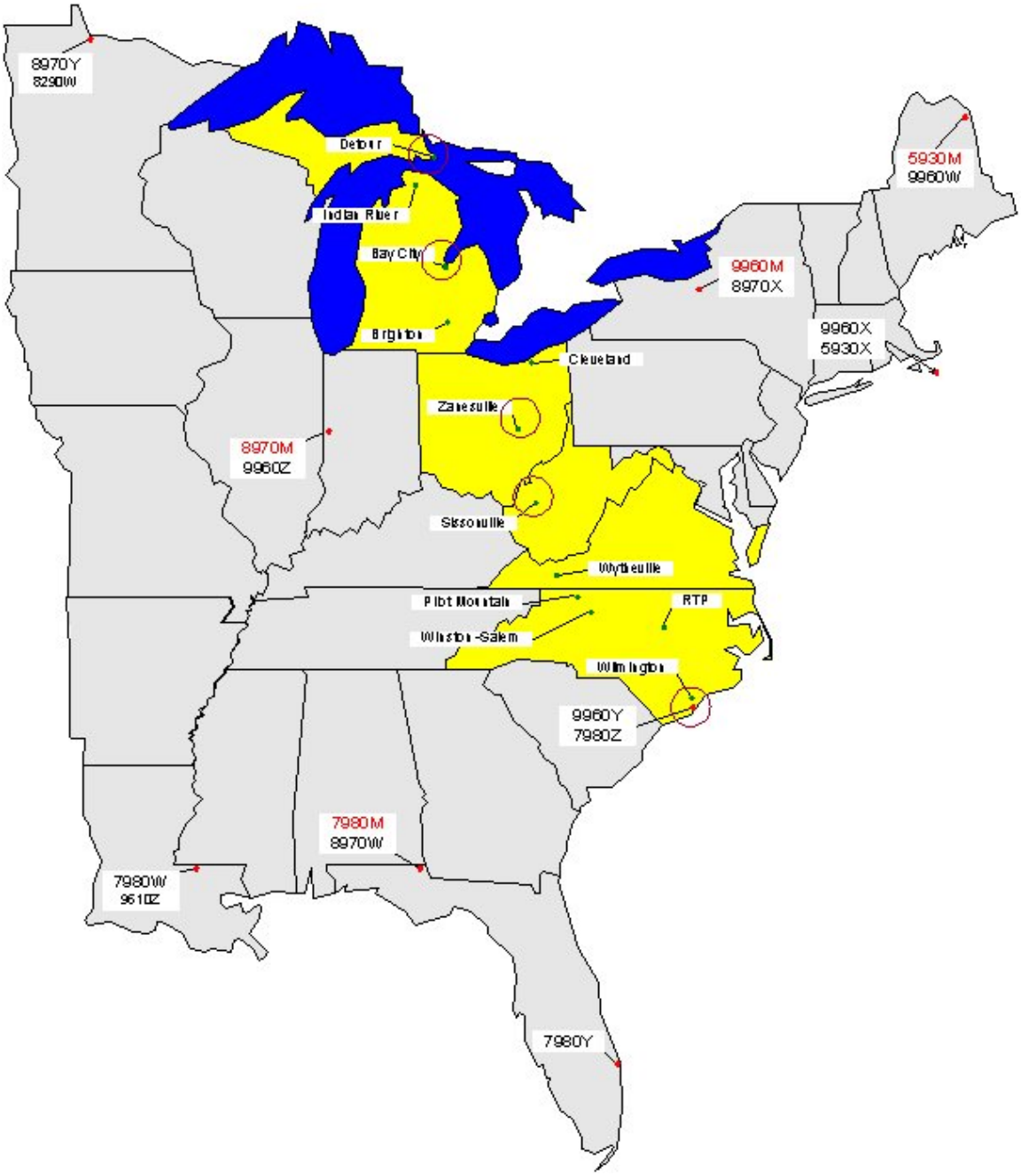


*Figure 7. Coverage area for test of legacy LORAN's ability to meet CDMA requirements.*

The tests did not apply additional secondary factors (ASF) phase corrections to the received data, and as expected, LORAN's UTC accuracy is a function of the distance to the transmitter. In all tests where the master station was located less than 1600 km from the testing site, LORAN was able to provide UTC accuracy about one order of magnitude better than the CDMA specification. At least two, and usually three master stations were within 1000 km at all test sites, providing redundant sources of UTC in the event that a given transmitter was off the air. For example, tests conducted from Wilmington, North Carolina, compared GPS to LORAN signals from master stations located at Malone, Florida (7980-M), Dana, Indiana (8970-M), and Seneca, New York (9960-M). During the approximate 30 minute tests, the time difference between GPS and LORAN was less than 1 µs, and the range of the phase fluctuations was a few tenths of a microsecond [20].

eLORAN includes improvements at the transmitter and the distribution of differential corrections via the LDC that significantly improve the accuracy of the received time. New time and frequency equipment at the LORAN-C transmitting stations provides time (via an ensemble of three cesium clocks) that is synchronized to within 0.02 µs with respect to UTC(USNO) [21]. Differential corrections are computed based on signal measurements made by a network of far-field monitors operated by the United States Coast Guard (USCG) (Figure 7). The corrections are distributed via the LDC, and applied by receivers that demodulate and decode the LDC message. Calibrated receivers that apply the differential corrections can recover time accurate to within 0.1 µs [22].

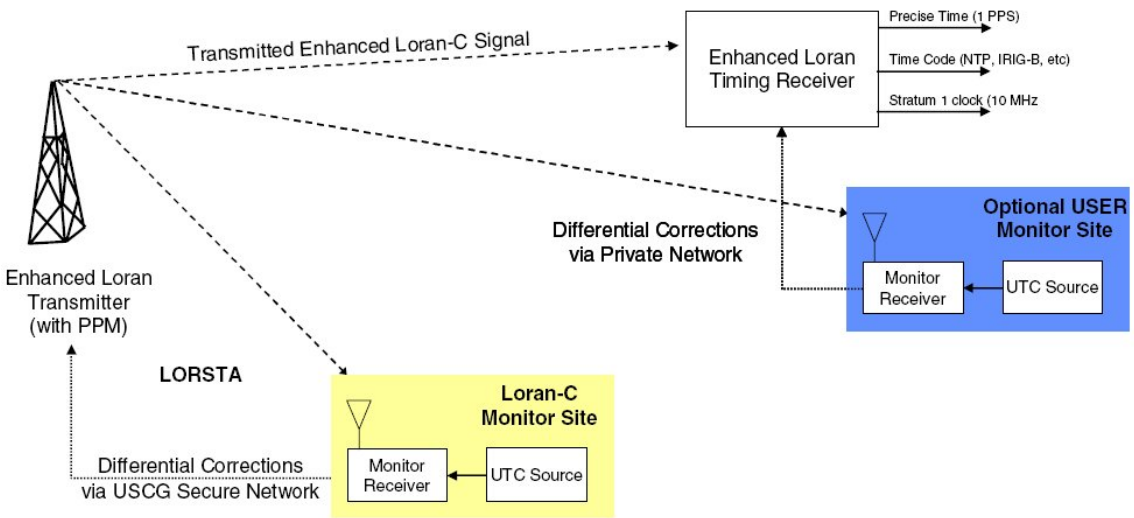


*Figure 8. USCG monitoring sites provide the differential corrections included in eLORAN broadcasts.*

As of 2005, all LORAN stations in the continental United States (CONUS) have been upgraded with new timing systems, new transmitter equipment (at the sites that still had vacuum tube transmitters) and new command/control equipment [22]. At this writing (May 2006) the formal introduction of eLORAN is still awaiting United States government approval, but the first experimental time code broadcasts over the LDC were successfully completed from the station at Jupiter, Florida on October 18, 2005, ushering in a new era of improved timing capabilities for the LORAN network [23].

## 7. Other sources that meet ST1 PRS requirements

As mentioned earlier in Section 3.2, one alternative to GPS as a ST1 PRS is a cesium atomic frequency standard. Cesium oscillators are intrinsic standards, an autonomous source of time and frequency, and as the driving force behind GPS and LORAN, will easily meet all performance requirements. However, they typically cost $30,000 or more per unit, and their beam tubes are subject to failure, often after a period of five to ten years. The cost of replacing a beam tube often exceeds half of the purchase price of the original unit. These high costs prevent telecommunication providers from using cesium standards at a large number of sites. If they are used at all, they are strategically deployed at select places within a network.

Rubidium oscillators are also atomic standards, but generally one order of magnitude less expensive and typically two to three orders of magnitude less accurate than a cesium standard. With periodic calibration, a high quality rubidium can serve as a ST1 PRS, but when the cost of calibration is factored in, they are a less attractive choice. They do, however, easily meet GSM requirements, and as their price and size have gone down substantially in recent years, they have become more widely deployed. Quartz oscillators, including the most stable oven controlled quartz oscillators (OCXOs) available, are unable to meet ST1 PRS requirements for longer than very short intervals, but some are sufficient for GSM. And of course, both quartz and rubidium oscillators have many applications for clock levels below ST1 (Table 1), and as disciplined oscillators in BITS units.

It should also be noted that the standalone oscillators are frequency standards by definition. Their 1 pps outputs need to be synchronized to the UTC second before they can serve as a synchronization reference. Unlike a GPS or LORAN disciplined oscillator, a standalone oscillator cannot recover UTC by itself, which makes them ill-suited for time dependent applications such as CDMA. Table 4 provides a summary of the performance characteristics of the various types of standalone oscillators. Note that the numbers provided in Table 4 are "typical" of a fairly wide range of products, but are not representative of all available products.

*Table 4. Typical performance characteristics of standalone oscillators.*

| Oscillator Type | Quartz (TCXO) | Quartz (OCXO) | Rubidium | Cesium Beam |
|---|---|---|---|---|
| Resonance Frequency (Hz) | Various | Various | 6 834 682 608 | 9 192 631 770 |
| Frequency Accuracy after warm-up | $1 \times 10^{-6}$ | $1 \times 10^{-7}$ to $1 \times 10^{-10}$ | $5 \times 10^{-9}$ to $5 \times 10^{-12}$ | $5 \times 10^{-12}$ to $5 \times 10^{-14}$ |
| Warm-Up Period | < 1 minute | < 15 minutes | 30 minutes | 30 minutes |
| Stability at 1 second | $1 \times 10^{-9}$ | $1 \times 10^{-12}$ | $5 \times 10^{-11}$ to $5 \times 10^{-12}$ | $5 \times 10^{-11}$ to $5 \times 10^{-12}$ |
| Stability at 1 day | $1 \times 10^{-8}$ | $1 \times 10^{-10}$ | $5 \times 10^{-12}$ | $3 \times 10^{-14}$ |
| Aging/year | $1 \times 10^{-6}$ to $5 \times 10^{-7}$ | $5 \times 10^{-7}$ to $5 \times 10^{-9}$ | $1 \times 10^{-10}$ to $5 \times 10^{-10}$ | None, by definition |
| Power Consumption | Various | < 15 W during oven warmup, < 5 W during operation | < 50 W during warmup, < 25 W during operation | < 100 W during warmup, < 70 W during operation |
| Life Expectancy | Indefinite | Indefinite | > 15 years | 5 to 25 years |
| Unit Cost | < $1000 | < $3000 | $1500 to $15000 | $30,000 and up |
| Meets PRS Requirements | No | No | Maybe, with periodic calibration | Yes |

Disciplined oscillators controlled by radio signals other than GPS or LORAN can also meet ST1 PRS requirements. These signals include CDMA [24] (it can obviously be used as a PRS for a non-CDMA network only), GALILEO [25], GLONASS [26], the GPS Wide Area Augmentation System (WAAS) [27, 28], and NIST radio station WWVB [29, 30]. These signals are summarized along with GPS and eLORAN in Table 5, and a discussion of their relative

suitability as a GPS backup system is provided in the following section. With the exception of CDMA and WWVB, the signals listed in Table 5 are capable of sub-microsecond synchronization, which potentially allows them to provide synchronization for future networks with more stringent requirements than those of CDMA.

*Table 5. Potential PRS signal providers (listed alphabetically).*

| Signal | Carrier Frequency | Delivery System and Estimated Coverage Area | Time Scale Reference | Frequency Accuracy (1 day) | Time Accuracy (μs) |
|---|---|---|---|---|---|
| CDMA | 800, 900, 1700, 1800, and 1900 MHz regions | Over 100,000 North American base stations deliver forward link timing signals that cover about a 50 km radius. | GPS | $5 \times 10^{-13}$ | 100 ** |
| GALILEO | 1191.795 MHz (E5) 1278.75 MHz (E6), 1575.42 MHz (L1) | Worldwide coverage, but the full constellation of 30 satellites will not be in place until 2008 at the earliest. | GALILEO System Time (GST), steered to UTC | $\sim 1 \times 10^{-13}$ | ~0.1 * |
| GLONASS | 1602.00 – 1614.94 MHz (L1), 1246–1256.06 MHz (L2) | Worldwide coverage, but not continuous, only 12 satellites in orbit as of April 2006 (full constellation requires 21). | UTC(SU) | $\sim 1 \times 10^{-13}$ | ~0.1 * |
| GPS | 1575.42 MHz (L1) 1227.60 MHz (L2) | Worldwide coverage, a constellation of at least 24 satellites in semi synchronous orbit. | UTC(USNO) | $\sim 1 \times 10^{-13}$ | ~0.1 * |
| LORAN | 100 kHz | A network of ground based transmitters (24 in the U. S. and five in Canada) that cover all states except Hawaii. | UTC(USNO) | $\sim 1 \times 10^{-13}$ | ~0.1 *** |
| WAAS | Overlay on GPS L1 (1575 MHz) | Signals are broadcast from two geostationary satellites. Coverage reaches all 50 states, but excludes parts of Alaska. | UTC(USNO) | $\sim 1 \times 10^{-13}$ | ~0.1 * |
| WWVB | 60 kHz | A single transmitter in Fort Collins, Colorado that can be received in all 50 states during the nighttime hours. However, there are many gaps in the daytime coverage area, and reception in Alaska and Hawaii is tenuous even at night. | UTC(NIST) | $5 \times 10^{-12}$ | 100 **** |

* Time accurate to within 0.1 μs is typical if the antenna cable is calibrated and a delay constant is entered into the receiver, but better accuracy is possible.

** Time accurate to within 100 μs only requires that a base station is located within 30 km of the receiver. In areas with a high density of base stations the time accuracy is often < 10 μs without any receiver calibration.

*** Time accurate to 0.1 μs requires the application of LDC corrections and calibration of the receiver and antenna.

**** The user must estimate and remove path delay to obtain time within 100 μs. It is usually difficult to do better than this, due to the problem of cycle ambiguity.

## 8. Necessary features of a backup PRS to GPS and LORAN's ability to meet them

As described above, cesium oscillators and oscillators disciplined by several types of radio signals (Table 5) meet ST1 PRS requirements. This section describes other requirements that must also be met by any potential backup to GPS.

.

### 8.1 A GPS backup must be under United States control

For reasons of national security, it seems logical for the telecommunications industry to avoid using PRS signals that are outside the control of the United States government or industry. This excludes signals from the Russian GLONASS satellite constellation [26] and the forthcoming European GALILEO satellite constellation [25].

### 8.2 A GPS backup must derive time from a source that is independent of GPS

For obvious reasons, any potential backup to GPS must be referenced to a timing source other than GPS. This requirement is not met by either CDMA or WAAS, both of which rely upon GPS as their timing reference.

### 8.3 A GPS backup must be easily receivable throughout the continental United States (CONUS)

To be usable as a UTC reference, a LORAN receiver needs only to be within the coverage area of one station. Figure 9 shows the locations of the existing LORAN-C transmitters in North America and a conservative estimate of the coverage based on a 1000 km signal radius from each station. All states have redundant coverage from multiple transmitters with the exception of Hawaii, where no LORAN transmitters currently exist.

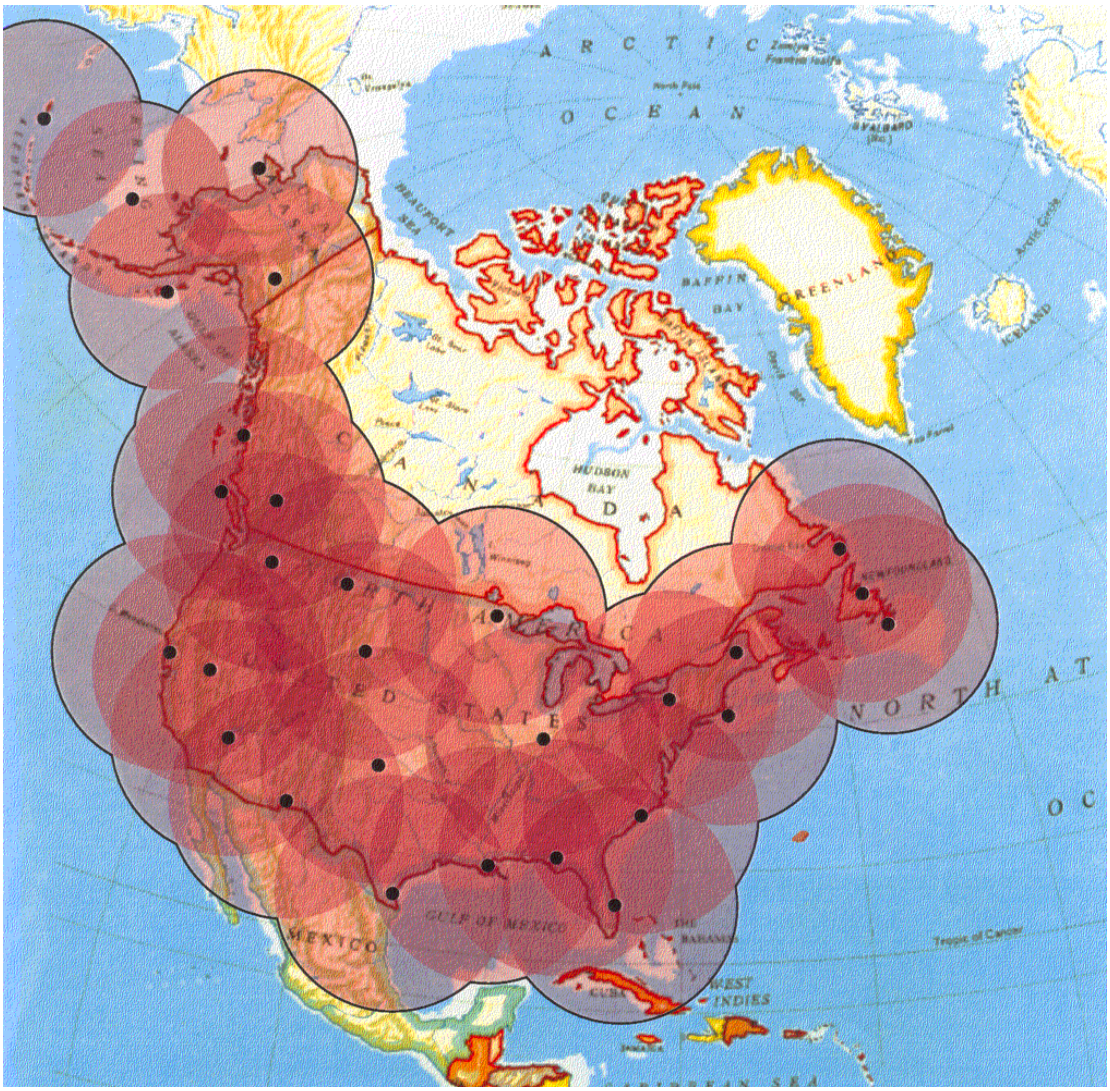


*Figure 9. Conservative estimate of reliable LORAN coverage for PRS applications.*

LORAN also has a potential advantage over all of the satellite signals because it can work indoors with an H-field antenna [31]. WWVB also works well indoors, but because only one transmitter exists, there are many gaps in its daytime coverage area. These coverage area gaps generally prevent WWVB from being considered as a PRS in a telecommunications network.

**8.4 A GPS backup must be traceable to Coordinated Universal Time (UTC)**

As discussed in Section 3, a PRS must be verifiably traceable to Coordinated Universal Time (UTC). The United States government operates two major national timing laboratories, the National Institute of Standards and Technology (NIST) and the United States Naval Observatory (USNO). Both maintain real-time UTC time scales, called UTC(NIST) and UTC(USNO) respectively, and traceability to UTC can be established through comparisons made with either laboratory. NIST and USNO have a mutual written agreement that their UTC time scales will never differ from each other by more than 0.1 µs, and in practice, the difference is usually less than 0.01 µs. This can be verified through the *Circular-T* document published monthly by the International Bureau of Weights and Measures (BIPM) [32]. The *Circular-T* publishes time differences for UTC(NIST) and UTC(USNO) at five day intervals.

LORAN and GPS are directly referenced to UTC(USNO), and comparisons between their received signals and UTC(NIST) are continuously recorded and published [33], making traceability easy to establish with either system. As shown in Table 5, WAAS is directly referenced to UTC(USNO), and WWVB to UTC(NIST), so traceability is also easy to establish with those signals. CDMA, GALILEO, and GLONASS are not directly controlled by either NIST or USNO, although they are referenced to UTC sources. While it is certainly possible to document an indirect chain of traceability with any of these systems [34], it is debatable as to whether these signals meet the "verification to UTC" requirement of a PRS.

**8.5 A GPS backup must be available in situations where GPS is unavailable**

This requirement is related to the independence requirement (Section 8.2), because a system that derives its timing from GPS will eventually fail if GPS is unavailable. It is also related to the subject of RF interference discussed in Section 4.4. If GPS has failed due to RF interference, either intentional (jamming or spoofing) or unintentional (such as interference from a local television transmitter), then obviously any potential backup must be immune to this same interference and remain operational during the GPS outage. Note that other satellite based signals (particularly GALILEO and WAAS) share similar frequency bands. Thus, there is a high probability that if GPS failed due to RF interference issues, that other satellite signals would also fail, and be unable to serve as a backup.

To demonstrate LORAN's ability to meet synchronization requirements during a GPS outage, several experiments were conducted during the GPS JAMFEST held at Holloman Air Force Base and White Sands Missile Range in New Mexico from October 31 through November 4, 2005 [35]. Thirteen GPS jammers were installed at strategic locations around the testing area. The GPS jammers supported multiple signal modes including Continuous Wave (CW), offset CW, Binary Phase Shift Keyed (BPSK), broadband noise and swept CW. A GPS/LORAN receiving system was installed in a recreational vehicle, and set up to collect timing data.

Figure 10 shows the experimental setup. Four timing receivers produced by the same manufacturer were compared to a cesium oscillator using a multi-channel time interval counter. One device was a prototype eLORAN receiver that tracks the LDC and provides steering corrections to a rubidium oscillator. The other three devices were GPS receivers; two were single-frequency (L1) GPSDOs (one with a quartz local oscillator and one with a rubidium). The third GPSDO used a dual-frequency (L1 and L2) receiver to discipline a rubidium oscillator.

Jamming periods lasted for 30 to 40 minutes followed by 15 minutes of GPS availability. These periods were not long enough to show the effects of a prolonged GPS outage, but all three of the GPSDOs included in the test lost signal lock and went into holdover mode during the jamming periods, whereas LORAN was not affected at all.

Figure 11 shows the performance of the quartz GPSDO during a day with four periods of jamming, each lasting for about 30 minutes. The scale for LORAN phase error is on the left side of the graph, the scale for GPS phase error is on the right side. The four periods of jamming are visible as phase shifts ranging from 2 to 8.5 µs. During these intervals, the GPSDO rapidly accumulated a time error when it was unable to receive signals. During the 15 minute recovery period between jamming sessions, the GPSDO was able to reacquire GPS and regain accuracy to within about 0.1 µs. The rubidium GPSDOs were unable to receive GPS during the jamming period, but have much better holdover capability, and were not seriously affected.

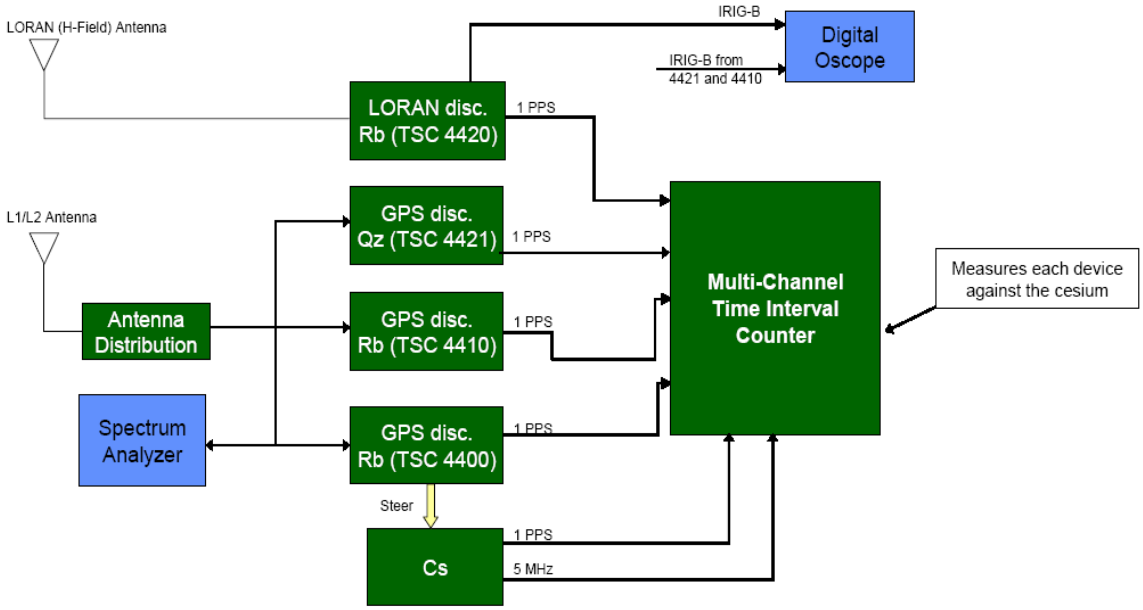


*Figure 10. Measurement setup used during GPS jamming experiments.*

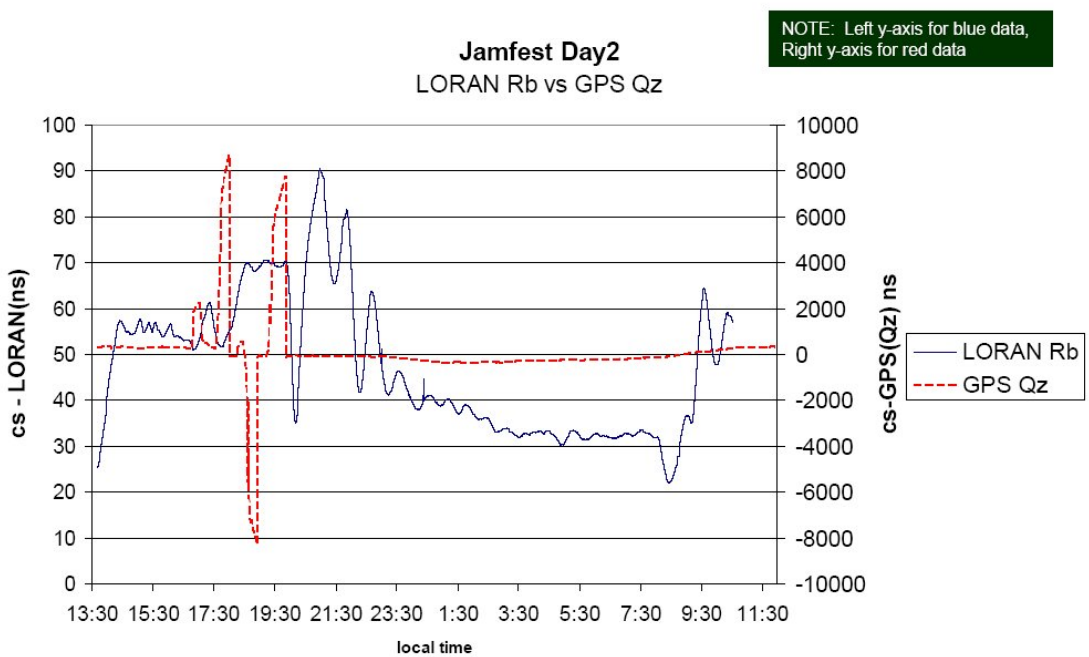


*Figure 11. Performance of LORAN versus quartz based GPSDO during jamming experiments.*

To simulate a longer outage, power was removed from the GPS antenna distribution amplifiers for a five hour period, causing all three receivers to lose the signal. The LORAN receiver was still operating in the GPS jamming environment during this interval, but now the GPS receivers were operating in an outage situation rather than a jammed situation. The simulated GPS outage began at 16:40 (local time) and ended at 21:40. Figure 12 shows that the time error of the quartz GPSDO exceeded 25 µs before the signal was restored, much worse than the CDMA requirement of 10 µs for an 8 hour outage (Table 2). However, Figure 13 shows that the time error of one of the rubidium GPSDOs deviated by only about 0.15 µs during the five hour outage.

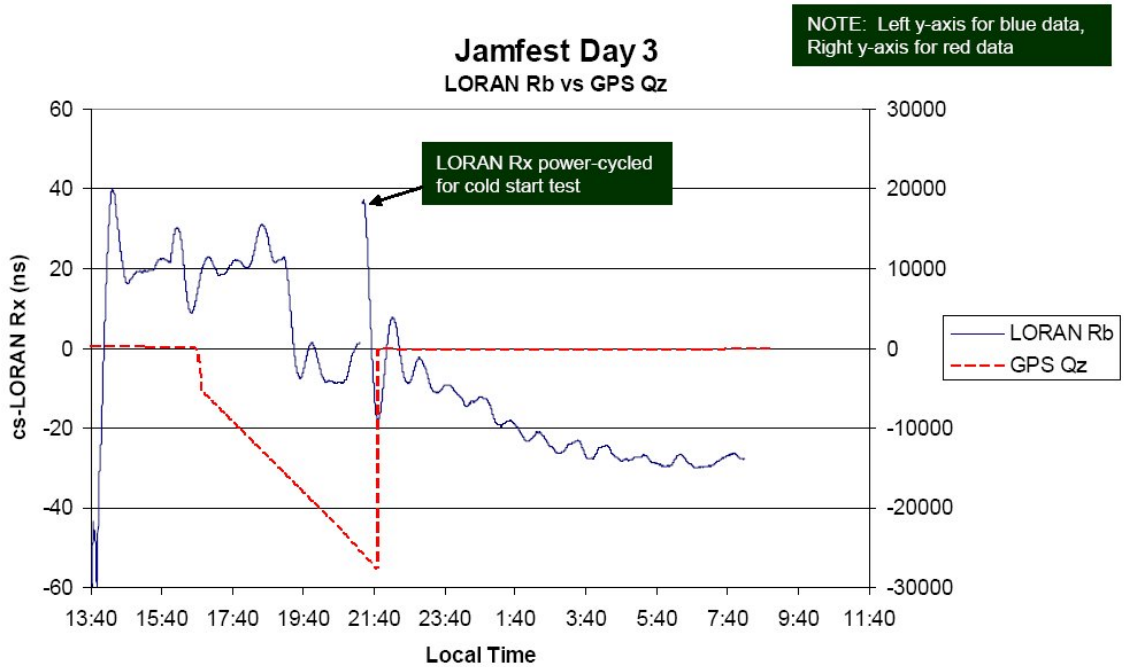


*Figure 12. Performance of LORAN versus quartz GPSDO during a five hour simulated outage.*

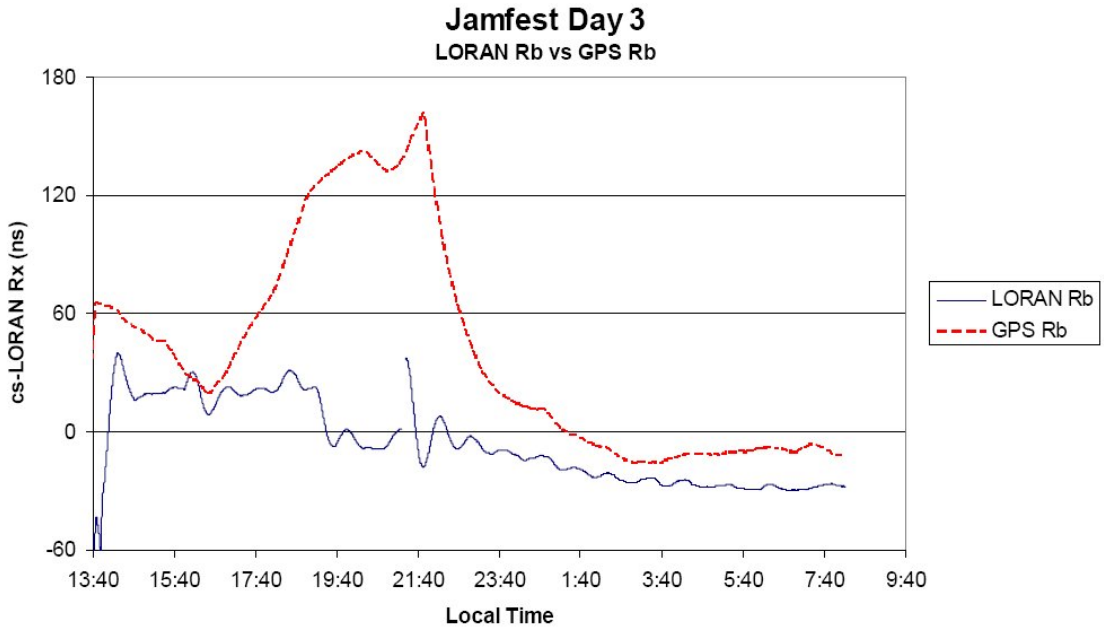


*Figure 13. Performance of LORAN versus rubidium GPSDO during a five hour simulated outage.*

**8.6 A GPS backup must be available to recover UTC from a cold start condition if GPS is unavailable**

Near the end of the simulated outage, at 21:16 local time, the LORAN receiver was powered down and powered back up to demonstrate that it has the ability to recover UTC even when GPS is unavailable. At 21:22 local time, the unit had completed the initialization procedure and synchronized to within about 0.04 µs of where it was prior to being turned off (visible in both Figures 12 and 13). During this period, of course, a GPS receiver that was power cycled would be unable to produce UTC until signals from the satellite were again made available. This test provides clear evidence that LORAN can continue to meet PRS and CDMA requirements in the absence of GPS. Other satellite

based timing systems (GLONASS, GALILEO, and WAAS) would likely be unable to self start in a scenario where GPS was unavailable due to interference because they operate in similar frequency bands, and because a receiver attempting to acquire lock typically requires 6 to 10 dB more carrier-to-noise margin than it needs to continue tracking satellites that have already been acquired [2]. The terrestrial-based LORAN system is also easier to repair in the event of an equipment failure than satellite based systems, and immune to space based disturbances, such as solar activity, or a weapon detonated in space. In fact, if a LORAN station were damaged, it could likely be repaired in days, perhaps within the holdover capabilities of most telecommunication systems. While the transmitter was awaiting repair, a receiver in the CONUS could still lock to several other transmitters, due to the overlapping coverage area illustrated in Figure 9.

Table 6 summarizes the PRS/CDMA requirements met by the radio timing signals that are candidates to backup GPS. LORAN (highlighted) is the only system that meets all ten requirements, with all other systems falling short in at least three critical areas. This analysis identifies LORAN as clearly the best available backup PRS/CDMA source.

*Table 6. Summary of PRS/CDMA requirements met by non-GPS signals.*

| Requirement | Section in Paper | CDMA | GALILEO | GLONASS | LORAN | WAAS | WWVB |
|---|---|---|---|---|---|---|---|
| Meets PRS/STI requirements | 3 | Y | Y | Y | Y | Y | Y |
| Meets CDMA timing requirements | 3.1 | N | Y | Y | Y | Y | N |
| Provides sub-microsecond synchronization, potentially meeting the needs of future networks | 7 | N | Y | Y | Y | Y | N |
| Available now | 7 | Y | N | Y | Y | Y | Y |
| Controlled by United States government or industry | 8.1 | Y | N | N | Y | Y | Y |
| Independent of GPS | 8.2 | N | Y | Y | Y | N | Y |
| Complete coverage of CONUS (daytime, no gaps) | 8.3 | N | Y | N | Y | Y | N |
| Traceable to UTC(USNO) or UTC(NIST) | 8.4 | N | N | N | Y | Y | Y |
| Available in situations when GPS is not available | 8.5 | N | N | N | Y | N | Y |
| Can recover UTC from a cold start condition if GPS is unavailable | 8.6 | N | N | N | Y | N | Y |
| Total requirements met | | 3/10 | 5/10 | 5/10 | 10/10 | 7/10 | 7/10 |

## 9. Summary and Conclusion

Telecommunication providers must ask this question: What would happen to our networks if GPS were no longer available? This discussion has shown that LORAN can provide telecommunication providers with a redundant synchronization source to GPS that satisfies the ten technical requirements identified in this paper, a distinction that no other potential backup signal to GPS can claim. Legacy LORAN has historically demonstrated the ability to easily meet the frequency performance requirements of a PRS in a wired telephone network and the basic requirements of the wireless CDMA network; eLORAN adds the timing capabilities that allow it to better meet the time synchronization requirements of CDMA and to potentially support future networks with sub-microsecond synchronization

requirements. With its large coverage area and its high level of performance, eLORAN can provide telecommunications providers in the United States with the synchronization redundancy they need to keep their networks fully operational in the absence of GPS.

*This paper is a contribution of the United States government and is not subject to copyright.*

## References

[1] M. A. Lombardi, A. N. Novick, and V. S. Zhang, "Characterizing the Performance of GPS Disciplined Oscillators with Respect to UTC(NIST)," *Proceedings of the 2005 IEEE Frequency Control Symposium and Precise Time and Time Interval (PTTI) Meeting*, pp. 677-684, August 2005.

[2] US Department of Transportation, Volpe Center, *Vulnerability Assessment of the Transportation Infrastructure Relying on the Global Positioning System*, August 2001.

[3] Federal Aviation Administration (FAA), *Loran's Capability to Mitigate the Impact of a GPS Outage on GPS Position, Navigation, and Time Applications,* March 2004.

[4] US Department of Transportation, Radionavigation Systems Task Force, *Radionavigation Systems: A Capabilities Investment Strategy*, January 2004.

[5] M. A. Lombardi, T. Celano, and E. D. Powers, "The Potential Role of Enhanced LORAN-C in the National Timing Infrastructure," *Proceedings of the 2005 International Loran Association (ILA) and Technical Symposium*, 15 p., October 2005.

[6] National Communications System, "Telecommunications Network Time Synchronization," *NCS Technical Information Bulletin 99-4*, 30 p., April 1999.

[7] J. P. Runyon, *NRSC Timing Outages Task Group Report*, March 6, 2002.

[8] American National Standard for Telecommunications, "Synchronization Interface Standards for Digital Networks," *ANSI T1.101*, 1999.

[9] International Telecommunications Union, "Timing characteristics of primary reference clocks," *ITU Recommendation G.811*, September 1997.

[10] M. S. Gast, *T1: A survival guide*, O'Reilly Media, 2001.

[11] Telecommunications Industry Association/Electronics Industry Association (TIA/EIA), "Mobile Station-Base Station Compatibility Standard for Wideband Spread Spectrum Cellular Systems," *TIA/EIA Standard 95-B*, Arlington, VA: Telecommunications Industry Association, March 1999.

[12] 3rd Generation Partnership Project 2 (3GPP2), "Recommended Minimum Performance Standards for cdma2000 Spread Spectrum Base Stations: Release B," *C.S0010-B, Version 2.0*, February 2004.

[13] European Telecommunications Standards Institute (ETSI), "GSM: Digital cellular telecommunication system (Phase 2+); Radio subsystem synchronization (GSM 05.10 version 8.4.0)," *ETSI TS 100 912*, 1999.

[14] Presidential Decision Directive, "U.S. Space-Based Positioning, Navigation, and Timing Policy," December 15, 2004.

[15] ICD-GPS-200C, http://www.navcen.uscg.gov/ftp/policy/icd200/ICD200Cw1234.pdf

[16] B. Peterson, K. Dykstra, K. M. Carroll, and P. F. Swaszek, "Differential Loran," *Proceedings of the 2003 International Loran Association (ILA) and Technical Symposium*, 19 p., November 2003.

[17] K. M. Carroll and T. Celano, "Timing via the New LORAN-C System," *Proceedings of the 2003 IEEE Frequency Control Symposium*, pp. 245-249, May 2003.

[18] Institute of Electrical and Electronics Engineers (IEEE), "IEEE Standard Definitions of Physical Quantities for Fundamental Frequency and Time Metrology − Random Instabilities," *IEEE Standard 1139-1999,* prepared by IEEE Standards Coordinating Committee 27 on Time and Frequency, March 1999.

[19] C. Norman, "Synchronization in the Global Telecommunications Network," *2006 NIST - ATIS Workshop on Synchronization in Telecommunication Systems (WSTS)*, March 2006.

[20] W. J. Walsh, "Loran as an Independent Source of UTC in Telecommunications Applications," *Proceedings of the 2002 International LORAN Association (ILA) and Technical Symposium*, October 2002.

[21] T. Celano and K. Carroll, "Time and Frequency Equipment Capstone," *Proceedings of the 2004 International LORAN Association (ILA) and Technical Symposium*, November 2004.

[22] T. Celano, C. Biggs, B. Peterson, and K. Shmihluk, "Modernized LORAN-C Timing Test Bed Status and Results," *Proceedings of the 2005 IEEE Frequency Control Symposium and Precise Time and Time Interval (PTTI) Meeting*, pp. 824-829, August 2005.

[23] T. Celano, C. Biggs, K. Shmihluk, and B. Peterson, "Modernized LORAN-C Timing Test Bed Status and Results," *Proceedings of the 2005 International Loran Association (ILA) and Technical Symposium*, October 2005.

[24] B. M. Penrod, "A New Class of Precision UTC and Frequency Reference Using IS-95 CDMA Base Station Transmissions," *Proceedings of the 2001 Precise Time and Time Interval Meeting (PTTI)*, pp. 279-291, December 2001.

[25] A. Moudrak, A. Konovaltsev, J. Furthner, J. Hammesfahr, A. Bauch, P. Defraigne, and S. Bedrich, "Timing Aspects of GPS-GALILEO Interoperability: Challenges and Solutions," *Proceedings of the 2004 Precise Time and Time Interval Meeting (PTTI)*, pp. 279-292, December 2004.

[26] A. Foks, J. Nawrocki, and W. Lewandowski, "Latest Calibration of GLONASS P-Code time Receivers," *Proceedings of the 2004 Precise Time and Time Interval Meeting (PTTI)*, pp. 99-104, December 2004.

[27] Federal Aviation Administration (FAA), "Specification for the Wide Area Augmentation System (WAAS)," *FAA-E-2892B*, September 1999.

[28] W. J. Klepczynski, P. Fenton, and E. Powers, "Time Distribution Capabilities of the Wide Area Augmentation System (WAAS)," *Proceedings of the 2001 Precise Time and Time Interval Meeting (PTTI)*, pp. 111-120, December 2001.

[29] M. A. Lombardi, "NIST Time and Frequency Services," *National Institute of Standards and Technology Special Publication 432*, 80 p., January 2002.

[30] G. K. Nelson, M. A. Lombardi, and D. T. Okayama, "NIST Time and Frequency Radio Stations: WWV, WWVH, and WWVB," *NIST Special Publication 250-67*, 161 p., January 2005.

[31] L. Roth, P. Schick, J. Jacoby, C. Schweitzer, D. Gervasi, and E. Wiley, "Enhanced or eLoran for time and frequency applications," *Proceedings of the 2005 IEEE Frequency Control Symposium and Precise Time and Time Interval (PTTI) Meeting*, pp. 816-823, August 2005.

[32] The *BIPM Circular-T* reports are archived at: http://www.bipm.org

[33] The NIST Time and Frequency division web site publishes GPS comparisons with UTC(NIST) data from every satellite (tf.nist.gov/service/gpstrace.htm) and LORAN comparisons with UTC(NIST) from three transmitters (tf.nist.gov/service/lorantrace.htm).

[34] M. A. Lombardi, "Traceability in Time and Frequency Metrology," *Cal Lab: International Journal of Metrology*, vol. 6, pp. 33-40, September-October 1999.

[35] T. Celano, C. Biggs, K. Shmihluk, and B. Peterson, "LORAN Timing Performance During GPS JAMFEST 2005," *GPS JAMFEST 2005 Report*, November 2005.