NIST Special Publication 250-67

NIST Time and Frequency Radio Stations: WWV, WWVH, and WWVB

Glenn K. Nelson
Michael A. Lombardi
Dean T. Okayama

Time and Frequency Division
Physics Laboratory
National Institute of Standards and Technology
325 Broadway
Boulder, Colorado 80305

October 2004

U.S. Department of Commerce
Donald L. Evans, Secretary

Technology Administration
Phillip J. Bond, Under Secretary for Technology

National Institute of Standards and Technology
Arden L. Bement, Jr., Director

Certain commercial entities, equipment, or materials may be identified in this document in order to describe a procedure or concept adequately. Such identification is not intended to imply recommendation or endorsement by the National Institute of Standards and Technology, nor is it intended to imply that the entities, materials, or equipment are necessarily the best available for the purpose.

National Institute of Standards and Technology Special Publication 250-67
Natl. Inst. Stand. Technol. Spec. Publ. 250-67, 160 pages (October 2004)
CODEN: NSPUE2

Contents

Introduction vii
Acknowledgements viii

Chapter 1. History and Physical Description 1
A. History of NIST Radio Stations 1
1. History of WWV 1
2. History of WWVH 6
3. History of WWVB 8
B. Physical Description of NIST Radio Station Facilities 10
1. WWV Facilities 10
a) WWV and WWVB Land 10
b) WWV Buildings 13
c) WWV Transmitters 15
d) WWV Antennas and Transmission Lines 16
e) WWV Back-Up Generator 20
f) WWV Time and Frequency Equipment 21
g) Other Equipment (Satellite Systems) 22
2. WWVB Facilities 23
a) WWVB Land 23
b) WWVB Buildings 23
c) WWVB Transmitters 26
d) WWVB Antennas 26
e) WWVB Back-Up Generator 29
f) WWVB Time and Frequency Equipment 30
3. WWVH Facilities 31
a) WWVH Land 31
b) WWVH Buildings 31
c) WWVH Transmitters 33
d) WWVH Antennas 33
e) WWVH Back-Up Generator 37
f) WWVH Time and Frequency Equipment 37
C. Organizational Control of NIST Radio Stations 39

Chapter 2. Technical Description 41
A. How the NIST Radio Stations Work 41
B. Technical Description of WWV 42
1. Timing system 42
2. Broadcast Format 43

a) Standard Carrier Frequencies 45
b) Voice Time Announcements 45
c) Standard Time Intervals 46
d) Standard Audio Frequencies 47
e) UT1 Corrections 48
f) 100 Hz Time Code 48
g) Official Announcements 51
h) Modulations Levels and Spectrum Allocation 52
i) WWV Signal Monitoring 53
3. Frequencies and Power Levels 54
4. WWV Antennas 56
5. WWV and WWVB Broadcast Monitoring and Alarm Systems 57
6. Commercial Electrical Power Monitoring 60
7. UPS Monitors 60
C. Technical Description of WWVB 61
1. Standard Carrier Frequency and Phase Signature 61
2. Time Code and Time Code Generators 61
3. Frequency and Power Level 64
4. Modes of Operation 64
5. Broadcast Control 65
6. RF Switch Matrix 65
7. Control Console 66
8. Automatic Tuning 66
9. Transmitters 66
10. Helix Houses 67
11. Antennas 70
12. Monitoring and Alarm Systems 71
D. Technical Description of WWVH 72
1. Timing System 72
2. Broadcast Format 73
a) Standard Carrier Frequencies 74
b) Voice Time Announcements 74
c) Standard Time Intervals 75
d) Standard Audio Frequencies 75
e) UT1 Corrections 76
f) 100 Hz Time Code 76
g) Official Announcements 77
h) Modulation Levels and Spectrum Allocation 77
i) WWVH Signal Monitoring 78
3. Frequencies and Power Levels 78
4. WWVH Antennas 79
5. WWVH Broadcast Monitoring and Alarm Systems 81
6. Commercial Electrical Power Monitoring 82
7. UPS Monitors 83

E. Telephone Time-of-Day Service 83
1. WWV Telephone Time-of-Day Service 83
2. WWVH Telephone Time-of-Day Service 84

Chapter 3. Operational Procedures 85
A. Hardware Maintenance 85
1. Transmitters and Broadcast Equipment 85
2. Timing Equipment 86
B. Facilities Maintenance 86
C. Scheduled Tasks 87
1. WWV Task Lists 87
2. WWVB Task Lists 89
3. WWVH Task Lists 91
D. Repairs and Service of Equipment 95
1. Facility Service and Repairs at WWV and WWVB 95
2. Facility Service and Repairs at WWVH 95
3. Mission-Specific Service and Repairs at the Radio Stations 96
4. Spare Parts 96
5. Ongoing Tasks 96
E. Failure Modes 97
1. WWV/WWVH Failure Modes 97
a) Timing Failures 97
b) Broadcast Failures 97
c) Other Equipment Failure Modes 98
2. WWVB Failure Modes 99
a) Timing Failures 99
b) Broadcast Failures 99
c) Other Equipment Failure Modes 100
F. Quality Control of Broadcast Information 100
1. Timing Control 100
2. Frequency Control 101
G. Recordkeeping 101
1. Operational Recordkeeping 101
2. Equipment Records 102
3. Other Records 103
4. Software 103
5. Data Backup Procedures 103
H. Physical Security 104
1. Physical Security of WWV and WWVB 104
2. Physical Security of WWVH 104

Chapter 4. Customers 105
A. Estimated Number of Customers 105
1. Estimated Number of Customers for WWV/WWVH 105

2. Estimated Number of Customers for WWVB 106
3. Estimated Num. of Customers for the Telephone Time-of-Day Service 107
B. Coverage Area for Radio Broadcasts 107
1. Coverage Area for WWV 108
2. Coverage Area for WWVH 109
3. Coverage Area for WWVB 111
a) The Effect of Receiver Sensitivity on Coverage Area Size 113
b) Field Strength Readings (Radial Measurements) 115
c) Monitoring Field Strength in Near Real-Time 117
C. How the NIST Radio Stations are Used by their Customers 117
1. WWV/WWVH Customers 117
a) Time Customers 118
b) Frequency Customers 120
c) Voice Announcement Customers (Non-Timing) 121
2. WWVB Customers 122
a) Time Customers 122
b) Frequency Customers 123
D. Customer Interaction and Support 124
1. Distribution of Information about the NIST Radio Stations 124
a) Web Site 124
b) Publications 124
c) Technical support (e-mail, phone, and postal mail) 126
d) HF Station Voice Announcements 126

Chapter 5. Measurement Uncertainties 127
A. Frequency Uncertainty of Transmitted Radio Signals 127
1. Transmitted Frequency Uncertainty of WWV and WWVB 127
a) The Method Used to Control the Station Clock Frequency 128
2. Transmitted Frequency Uncertainty of WWVH 132
B. Time Uncertainty of Transmitted Radio Signals 134
1. Transmitted Time Uncertainty of WWV and WWVH 135
2. Transmitted Time Uncertainty of WWVB 136
C. Frequency Uncertainty of Received Radio Signals 139
1. Received Frequency Uncertainty of WWV and WWVH 139
2. Received Frequency Uncertainty of WWVB 140
D. Time Uncertainty of Received Radio Signals 144
1. Received Time Uncertainty of WWV and WWVH 144
2. Received Time Uncertainty of WWVB 145
E. Time Uncertainty of Telephone Time-of-Day Service 145
F. Summary of Measurement Uncertainties 147
G. Establishing Traceability to UTC(NIST) 148

References 149

Introduction

The National Institute of Standards and Technology (NIST) provides standard time and frequency information through three radio broadcast stations that are routinely used by millions of customers. The stations, WWV and WWVB, located near Fort Collins, Colorado, and WWVH, located on the island of Kauai in Hawaii, are the only radio stations located in the United States whose sole purposes are to distribute standard time and frequency information.

This document was written in support of the NIST quality system. It provides a comprehensive look at the NIST time and frequency radio stations. It provides a physical and technical description of each station, and describes how the stations are operated by NIST. It also examines how the stations are used by their customers, and estimates the measurement uncertainties of the radio signals, both as transmitted by NIST and as received by customers.

Acknowledgements

The authors thank and acknowledge the radio station staff members who help perform the tasks described in these pages, and who contributed to the information contained in this document, including: Matt Deutch, Douglas Sutton, Bill Yates, and Judy Folley of WWV/WWVB, and Edward Pagaduan, Dean Takamatsu, Adele Ochinang, and Don Patterson (now retired from NIST) of WWVH. We also thank the current and former Time and Frequency Services group leaders, John Lowe and Wayne Hanson (now retired from NIST), for their editorial review of the document; and Andrew Novick of NIST in Boulder, who provided the cover art and several of the technical illustrations. And finally, a special thank you is due to Peder Hansen of the Space and Naval Warfare Systems Center, who has made large contributions to the current design of WWVB, and whose technical reports proved to be extremely valuable to the authors while creating this document.

Chapter 1

History and Physical Description

This chapter includes the history of NIST radio stations WWV, WWVB, and WWVB, and then provides a complete physical description of each station's facilities. It also describes the organizational control of the NIST radio stations.

A. History of NIST Radio Stations

1. History of WWV

WWV has a long and storied history that dates back to the early days of radio broadcasting. The National Institute of Standards and Technology (NIST) has been involved with radio and radio frequency research almost from its founding in 1901. Scientists at the National Bureau of Standards (NBS), as it was then known, began research in radio frequency propagation as early as 1905. During World War I, NBS had established its Radio Section, which worked closely with the military to research and develop radio techniques for defense and navigation.

The radio station call letters WWV were assigned to NBS in October 1919. Although the call letters WWV are now synonymous with the broadcasting of time signals, it is unknown why those particular call letters were chosen or assigned. Testing of the station began from Washington, D.C. in May 1920, with the broadcast of Friday evening music concerts that lasted from 8:30 to 11:00 p.m. The 50 W transmissions used a wavelength of 500 m (about 600 kHz, or near the low end of today's commercial AM band), and could be heard about 40 km away from the station. A news release dated May 28, 1920 hinted at the significance of this event:

> *This means that music can be performed at any place, radiated into the air by means of an ordinary radio set, and received at any other place even though hundreds of miles away. The music received can be made as loud as desired by suitable operation of the receiving apparatus. Such concerts are sometimes sent out by the radio laboratory of the Bureau of Standards in connection with trials of experimental apparatus. This music can be heard by anyone in the states near the District of Columbia having a simple amateur receiving outfit. The pleasant evenings which have been experienced by persons at a number of such receiving stations suggest interesting possibilities of the future [1].*

These early experimental musical broadcasts preceded all commercial broadcast stations by about six months. KDKA of Pittsburgh, Pennsylvania, generally acknowledged as the first commercial broadcast station, did not go on the air until November 2, 1920.

On December 15, 1920, WWV began assisting the Department of Agriculture in the distribution of market news to farm bureaus and agricultural organizations. A 2 kW spark transmitter and

telegraphic code was used to broadcast 500-word reports, called the Daily Market Marketgram, on 750 kHz. The operating radius was about 300 km out of Washington. These broadcasts continued until April 15, 1921.

By December 1922, it was decided that the station's purpose would be the transmission of standard frequency signals, as a reference standard for other radio broadcasters. The first tests of WWV as a standard frequency station were conducted on January 29–30 of 1923, and included the broadcast of frequencies from 200 to 545 kHz [1]. By March of 1923 [2], WWV was broadcasting frequencies from 125 to 2000 kHz on a monthly or weekly schedule. The accuracy of the transmitted frequency was quoted as being "better than three-tenths of one per cent." The output power of the station was now 1 kW [3].

During the early days of the WWV broadcasts, the transmitter was adjusted to the correct frequency using a working standard wavemeter, which had earlier been checked against the national standard wavemeter [4, 5]. The first quartz oscillators were developed shortly before WWV went on the air, and soon replaced the wavemeter as a national standard of frequency. For a short time, a working standard wavemeter was calibrated against a quartz oscillator, and then used to adjust the transmitter, but by 1927 a 50 kHz temperature-controlled quartz oscillator was located at the station site and used as a standard. During the transmission, the frequency of the transmitter was held manually so that no beat note was audible between the transmitter and the standard oscillator.

The quartz oscillator made it possible for WWV to meet the needs of the radio industry, which desperately needed a reliable reference standard for frequency. The number of radio stations was rapidly increasing across the United States, and it was essential for all stations to stay near their assigned frequencies so that stations would not interfere with each other, keeping the airwaves usable. By 1928, the Federal Radio Commission was calling for all stations to stay within 500 Hz of their assigned frequency. This prompted J. H. Dellinger, then chief of the Radio Section of NBS, to write:

> *While an accuracy of one-half percent was satisfactory five years ago, it is now necessary to give consideration to accuracies a thousand times as good. It is not merely a question of measurement. Frequencies of transmitting stations must actually be held constant with very great accuracy. This is becoming more and more important as the available radio channels become saturated. The maximum number of communications can be packed into the radio spectrum only if each stays within its own channel, as any wandering due to inaccurate frequency adjustment causes interference with communication on the adjacent channel [6].*

WWV was able to respond to the needs of the radio industry as improvements in quartz oscillator technology and improved measurement techniques made the transmitted uncertainty of WWV decrease from parts per thousand to parts per million by 1931. However, WWV also faced the problem of an inability to cover the entire United States, since for the most part its signals did not

reach the area west of the Mississippi. To address this problem, a list of other broadcast stations found to be suitable as frequency references was maintained. The frequencies of these stations were measured by NBS, and the list was published monthly in the *Radio Service Bulletin*. NBS also sponsored and helped control other standard frequency broadcasts. Stanford University's radio station 6XBM transmitted standard frequencies for the west coast from September 1924 to June 1926 [7], and frequencies of value to radio amateurs were sent from station IXM of the Massachusetts Institute of Technology, and station 9XL of the Gold Medal Flour Company in Minneapolis, Minnesota.

Since other stations were available as frequency references, an announcement was made in 1926 that WWV might be turned off [8]. However, many commercial, government, and private users responded, asking that the WWV broadcasts be continued and improved. Standard frequency broadcasts were discontinued at 6XBM, but work began at WWV to use a quartz oscillator to directly control the transmitter, rather than using the manual zero beat technique of the past. It was decided that only one frequency, 5 MHz, would be broadcast using this new approach.

Broadcasts on 5 MHz, controlled by quartz oscillators and accurate to parts in 10^6, began from College Park, Maryland in January 1931 from a new 150 W transmitter. The 5 MHz frequency was chosen for several reasons, including "its usual lack of skip distance and comparatively wide coverage, its relative freedom from previously assigned stations, and its convenient integral relation with most frequency standards" [9]. The transmission schedule varied, but for a time it was every Tuesday for two hours in the morning and two hours at night [10]. Within a year, the power was increased to 1 kW and the uncertainty was reduced to less than 1 part in 10^6 [11]. Until September 1931, less accurate broadcasts were made once per month on other frequencies.

By 1932, it was clear that the station had become part of the national infrastructure, and so work began on making the signals accessible to more Americans, by relocating the station and designing new transmitters and antennas in order to increase the coverage area. The station was moved in December 1932 to a Department of Agriculture site near Beltsville, Maryland. By April 1933, the station was broadcasting 30 kW at 5 MHz, and 10 and 15 MHz broadcasts (at 20 kW output power) were added in 1935. The 10 and 15 MHz frequencies were chosen as harmonics or multiples of 5 MHz. By this time, the station frequency was controlled to within about 2 parts in 10^8 [9]. In June 1937, standard musical pitch (A440), second pulses, standard time intervals, and ionosphere bulletins were added to the broadcast. The 15 MHz carrier was replaced by a 20 MHz transmission, although 15 MHz was restored in May 1940.

A fire of undetermined origin destroyed the station on November 6, 1940, but the standard frequency equipment was salvaged and the station returned to the air just 5 days later in an adjacent building with a 1 kW transmitter. An act of Congress in July 1941 provided $230,000 for the construction of a new station, which was built 5 km south of the former site and went on the air in January 1943 (Figure 1.1). This new location was to remain the home of WWV until December 1966 (although in 1961 the location name for the broadcast was changed from Beltsville to Greenbelt, Maryland). The new station broadcast 5 MHz and 10 MHz signals continuously, and 15 MHz signals during the day only. The radiated output power ranged from 8 to 10 kW. Evening broadcasts at 2.5 kHz began in February 1944 from a 1 kW transmitter.

Figure 1.1. Station WWV in Beltsville, Maryland.

By now well established as a reference source for frequency and time interval, WWV was still not used as a time synchronization source. The standard time interval markers broadcast by the station were not in phase with any reference source. This changed in June 1944, when the Superintendent of the United States Naval Observatory (USNO) authorized the synchronization of the WWV time signals with those of the USNO. In October 1945, the station added time announcements (Eastern Standard Time) in telegraphic code, given every 5 minutes. In December 1946, four new carrier frequencies were added: 20, 25, 30, and 35 MHz. The station was now broadcasting continuously on seven different frequencies, both day and night, and from 9 p.m. to 7 a.m. on 2.5 MHz [12].

Voice announcements of time, probably WWV's best known feature, began on January 1, 1950, helping to usher in the second half of the twentieth century. The voice announcements were given every 5 minutes. Standard frequencies of 600 and 440 Hz were broadcast during alternating minutes. The 30 and 35 MHz broadcasts were discontinued in January 1953, and the 25 MHz broadcast was stopped in 1977. With the exception of an almost two-year interruption in 1977 and 1978, the 20 MHz broadcasts have continued to the present day. Geophysical alert messages began in July 1957. And as quartz oscillator technology improved, so did the

frequency control of the broadcast. By 1958, the transmitted frequency was routinely kept within 2 parts in 10^{10} of the national standard.

From 1955 to 1958, WWV played a key role in the definition of the atomic second. During this period the United States Naval Observatory (USNO) in Washington, D.C. and the National Physical Laboratory (NPL) in Teddington, United Kingdom made simultaneous common-view measurements of the signals broadcast from WWV. The USNO compared the signal to an astronomical time scale (UT2), and NPL compared the signal to the new cesium standard they had just developed. The data they collected helped the USNO and NPL equate the length of the astronomical second to the atomic second, and led to the atomic second being later defined as the duration of 9,192,631,770 cycles of the cesium atom [13].

An experimental time code containing year, month, day, and precise time-of-day began in April 1960 [14] and was made part of the regular broadcast in January 1961 [15]. This time code, known as the NASA 36-bit code, was produced at a 100 Hz rate using 1000 Hz modulation. Believed to be the first digital time code broadcast in the United States, it made it possible for the first time for self-setting, radio controlled clocks to appear. Earlier radio controlled clocks required human interaction to initially synchronize. The current time code format (modified slightly over the years) was a modified version of the IRIG-H code format. It was initiated on July 1, 1971 using a 1 Hz rate and 100 Hz modulation. The new code included a daylight saving time (DST) indicator [16]. The telegraphic time code was also permanently removed on this date.

In 1966, WWV was moved to its current location, near Fort Collins, Colorado [17]. The LF station WWVB had gone on the air in July 1963 near Fort Collins, and it was decided that WWV would share the same 390 acre (158 hectare) site. On December 1, 1966 at 0000 UTC, the station in Greenbelt, Maryland went off the air, and the new station simultaneously went on the air in Fort Collins.

The current site is about 80 km from the Boulder laboratories where the national standards of time and frequency are kept. The proximity to Boulder and the use of atomic oscillators at the transmitter site originally made it possible to control the transmitted frequency to within 2 parts in 10^{11}, a factor of 10 improvement. Today, the station's frequency is controlled to within a few parts in 10^{13}.

In April 1967, WWV began broadcasting Greenwich Mean Time (GMT) instead of local time, and began its current format of using Coordinated Universal Time (UTC) in January 1974. The time announcements were now made every minute, instead of every 5 minutes, beginning on July 1, 1971, the same date when the current form of the digital time code was added. The station broadcast the first "leap second" in history in June 1972.

On August 13, 1991 WWV began broadcasting voice recordings that were digitized and stored in solid state memory devices. Previous voice recordings had been played back from mechanical drum recorders, which were more prone to failure. The change in equipment required the voice of the announcer to be changed. Don Elliot Heald is believed to have been the original voice of

WWV when announcements of time began in 1950 [18]. His voice was used until August 13, 1991, when the voice equipment was changed. For a short time, the voice of John Doyle was used for the time announcements. However, the station received a number of complaints that Mr. Doyle's voice was significantly different from Mr. Elliott's, a voice that had been associated with timekeeping for some forty years. As a result, the voice was changed to that of Lee Rodgers, who remains the current announcer. Mr. Rodgers voice was chosen since it was "close" to the voice of Mr. Elliott, and WWV's many listeners seemed to be happy with the change.

The station has undergone a number of equipment and maintenance changes in recent years, but the broadcast format of the station has remained essentially unchanged since 1991, when year information was added to the time code, and the DST notification included in the time code was improved.

2. History of WWVH

WWVH began operation on November 22, 1948 at Kihei on the island of Maui, in the then territory of Hawaii (Hawaii was not granted statehood until 1959). A meeting of the International Telecommunications Union (ITU) held in 1947 resulted in agreements that standard frequency stations would be allocated 2.5, 5, 10, 15, 20, and 25 MHz, frequencies already used by WWV. NBS then made the decision to build WWVH as a second standard frequency station to be operated simultaneously with WWV. The second station would increase the service coverage area, would allow NBS to determine the amount of accuracy obtainable in synchronizing two or more standard frequency stations, and would also allow NBS to develop methods for operating separate stations on the same frequency. The Hawaii location was chosen to maximize the coverage area and to prevent interference to existing users of WWV services [19].

The original WWVH station broadcast a signal of about 1 kW on 5, 10, and 15 MHz. The station was turned off twice daily, at 0700 and 1900 GMT, to permit reception of WWV. The path delay between WWV (then located in Beltsville, Maryland) and WWVH was about 27 ms, and the WWV signals were used to help calibrate the WWVH broadcast [19].

The station's frequency was controlled to within 5 parts in 10^9 by 1956 [20]. The radiated output power on 5, 10, and 15 MHz was 2 kW, and as it does today, the program schedule of WWVH closely followed the format of WWV [21]. However, voice announcements of time were not added to the WWVH broadcast until July 1964, some 14 years after they first appeared on WWV. The original voice announcements broadcast Hawaiian Standard Time, and occurred in the first half of every fifth minute during the hour [22]. A 1 kW, 2.5 MHz broadcast began in 1965.

The original WWVH station site (Figure 1.2) was being constantly threatened by an eroding shoreline, and much of the station's equipment and property had been damaged. It was estimated that 75 ft of shoreline were lost in the period from 1949 to 1967. By 1965, the ocean was within a few meters of both the main building and the 15 MHz antenna, and it was obviously necessary to move WWVH to a new location.

Figure 1.2. The original WWVH station site in Maui.

A congressional appropriation in June 1968 was used to fund the new station. On July 1, 1971, the station began broadcasting from its current location, a 30 acre (12 hectare) site near Kekaha on the Island of Kauai, Hawaii. This site is located on a United States Naval base called the Pacific Missile Range Facility (PMRF).

Many changes took place when the station moved to Kauai. The ERP was increased to 10 kW on 5, 10, and 15 MHz, and 2.5 kW (increased to 5 kW shortly afterwards) on 2.5 MHz. A new 2.5 kW 20 MHz broadcast was added (but later turned off in February 1977). Voice announcements began every minute, and a woman's voice, that of Ms. Jane Barbe, was used for the announcements. Also, the station began transmitting a digital time code for the first time, and the telegraphic time code was discontinued [23, 24]. The station was now offering services nearly identical to those provided by WWV.

In August 1991, both WWV and WWVH began broadcasting voice recordings that were digitized and stored in solid state memory devices. The voice of Jane Barbe was still used for the announcements, but the digital storage device made her voice sound slightly different.

Hurricanes have harmed WWVH on at least two occasions. In 1982, Kauai was struck by Hurricane Iwa and the station remained on emergency power for seven days. In 1992, Hurricane Iniki passed over the station, damaging the roof, interior, antennas, and fences, as well as cutting power and communications and blocking roads. For a few days, only the 5 MHz transmitter remained on the air (at half power), but other station services were quickly restored.

Like WWV, the station has undergone a number of equipment and maintenance changes in recent years, but the broadcast format has remained essentially unchanged since 1991, when year information was added to the time code, and the DST notification in the time code was improved.

3. History of WWVB

WWVB began operation as radio station KK2XEI in July 1956. This experimental station was operated from 1530 to 2000 hours universal time each working day from Boulder, Colorado. The continuous wave 60 kHz signal was not modulated, except for a call sign ID that was sent every 20 min. The effective radiated power (ERP) was originally said to be 40 W [24], but later reduced to 1.4 W. Data recorded in January 1957 showed that the frequency of the broadcast was within a few parts in 10^{10} of the national standard located in the adjacent Boulder laboratory, proving (as expected) that a LF transmission was far more stable than the signals from WWV and WWVH [25, 26].

The success of the 60 kHz broadcast led to the construction of a very low frequency (VLF) radio station named WWVL, which began operation from Sunset, Colorado in April 1960 using a carrier frequency of 20 kHz. It was originally planned to use the 20 kHz for worldwide coverage, and the 60 kHz broadcast for coverage of the United States [27]. In March 1960 [28], the call sign WWVB was obtained by NBS for the 60 kHz station. The "B" in the call sign probably stands for Boulder, the site of the original transmitter. However, one interesting theory is that the "B" could stand for Brown. W. W. Brown, one of the designers of the Fort Collins station, was employed as a contractor by NBS when the call sign application was submitted. Perhaps not coincidentally, his initials were W. W. B.

In 1962, NBS began building a new facility on a site north of Fort Collins, Colorado that would later also become the home of WWV. The site was attractive for several reasons, one being its exceptionally high ground conductivity, which was due to the high alkalinity of the soil. It was also reasonably close to Boulder (about 80 km, 49.3 mi), which made it easy to staff and manage, but much farther away from the mountains. The increased distance from the mountains made it a better choice for broadcasting an omni-directional signal.

WWVB went on the air on July 5, 1963, broadcasting a 5 kW signal on 60 kHz. This was later increased to 7 kW and then 13 kW, where it remained until December 1997. WWVL began transmitting a 500 W signal (later increased to 2 kW) on 20 kHz the following month. WWVL had a relatively short life span, going off the air in July 1972, but WWVB went on to become a permanent part of the nation's infrastructure [29, 30, 31].

A time code was added to WWVB on July 1, 1965 [32]. This made it possible for radio clocks to be designed that could decode the signal, recover the time, and automatically set themselves.

The time code format has changed only slightly since 1965; it uses a scheme known as binary coded decimal (BCD), which uses four binary digits (bits) to send one decimal number.

The WWVB broadcast continued operations up to the 1990's with only minor modification to the format or equipment. The number of customers was relatively small, mostly calibration laboratories who operated WWVB disciplined oscillators, devices that utilized the 60 kHz carrier as a frequency reference. Also, the limitations of the aging transmitting equipment at WWVB became increasingly apparent as the years passed. The situation came to a head on February 7, 1994 when a heavy mist froze to the antenna, and the antenna tuning system could not compensate, shutting down the WWVB broadcasts for about 30 hours [33]. After reviewing the available options, it was decided that a redesign of the entire WWVB transmitting system was necessary.

During the discussions about redesigning WWVB, it was decided to substantially raise the power level of the broadcasts. It was obvious that WWVB could play a much larger role and reach far more customers if the signal were easier to receive. In Europe, low cost radio controlled clocks were beginning to appear, designed to synchronize to stations such as MSF in the United Kingdom and DCF77 in Germany. These stations were very similar to WWVB, but had a much smaller coverage area to service. As a result, European customers were able to purchase radio controlled alarm clocks, wall clocks, and wristwatches at reasonable prices. These products lacked the external antennas and high sensitivity of the laboratory receivers, but would undoubtedly work well in the United States if the WWVB signals were made stronger.

Expert consultants and engineers from the U.S. Navy's LF/VLF support group were hired by NIST beginning in October 1994 to evaluate the WWVB system and propose changes. Their reports suggested that although the antennas themselves were in reasonably good shape, the transmitters and matching equipment should be completely redesigned and new or upgraded equipment installed. The project progressed in phases over the next several years, as funding and equipment became available. Discussions between agencies at the highest levels resulted in the transfer of modern LF transmitters and other equipment from recently decommissioned Navy facilities to NIST. New station staff members were hired who had previous experience with the new systems and equipment. Contractors normally employed by the Navy for LF work were hired to design a new broadcast control system fully utilizing the assets of the existing station.

A formal announcement that the WWVB power was to be increased was made during 1996, and a significant number of low cost radio controlled clock products were introduced in the United States shortly after the announcement. By December 1997, an interim stage of the upgrade was completed and the ERP was increased to about 25 kW. By August 5, 1999, the upgrade was complete. The new WWVB configuration used two modern transmitters operating into two antennas that simultaneously broadcast the same 60 kHz signal. This increased the ERP to 50 kW, about four times more power than the pre-upgrade configuration [33]. The increase in power greatly increased the coverage area, and low cost radio controlled clocks that synchronized to WWVB soon became commonplace throughout the United States.

B. Physical Description of NIST Radio Station Facilities

This section contains a physical description of the NIST radio station facilities, including the buildings and equipment located at each site. A technical description of how each radio station works is provided in Chapter 2.

1. WWV Facilities

a) WWV and WWVB Land

Radio Stations WWV and WWVB are located at 2000 East County Road 58, approximately 6 mi (9.7 km) north of Fort Collins, Colorado, 4 mi (6.4 km) southwest of Wellington, Colorado, and 50 mi (80 km) northeast of the NIST laboratories in Boulder, Colorado. The facilities occupy about 390 acres (158 hectares) of United States government land, located to the north of Colorado Highway 1 in section 7, Township 8 north, Range 68 west of the South P.M. in Larimer County [34]. Figure 1.3 shows the location of the stations relative to Denver and Boulder. Figure 1.4 provides a map of the station property, showing the locations of the buildings and antennas.

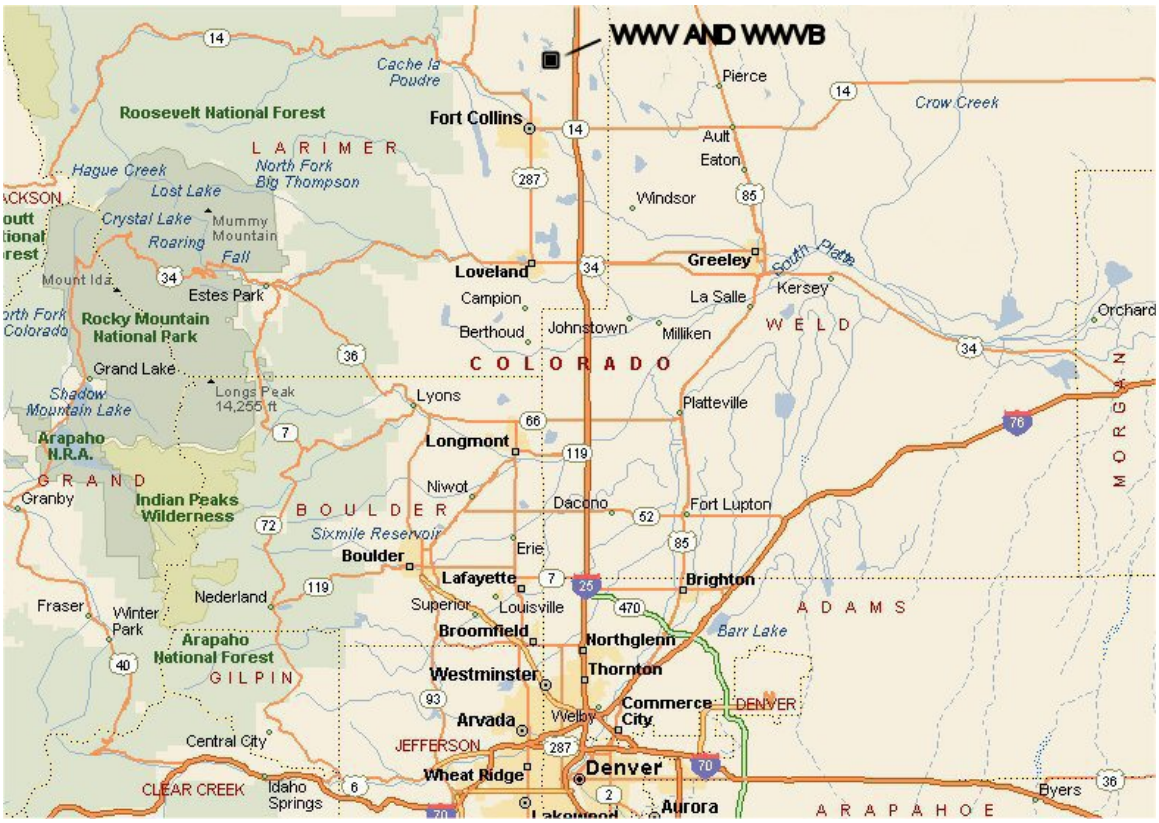

Figure 1.3. Map of the area surrounding the WWV/WWVB site.

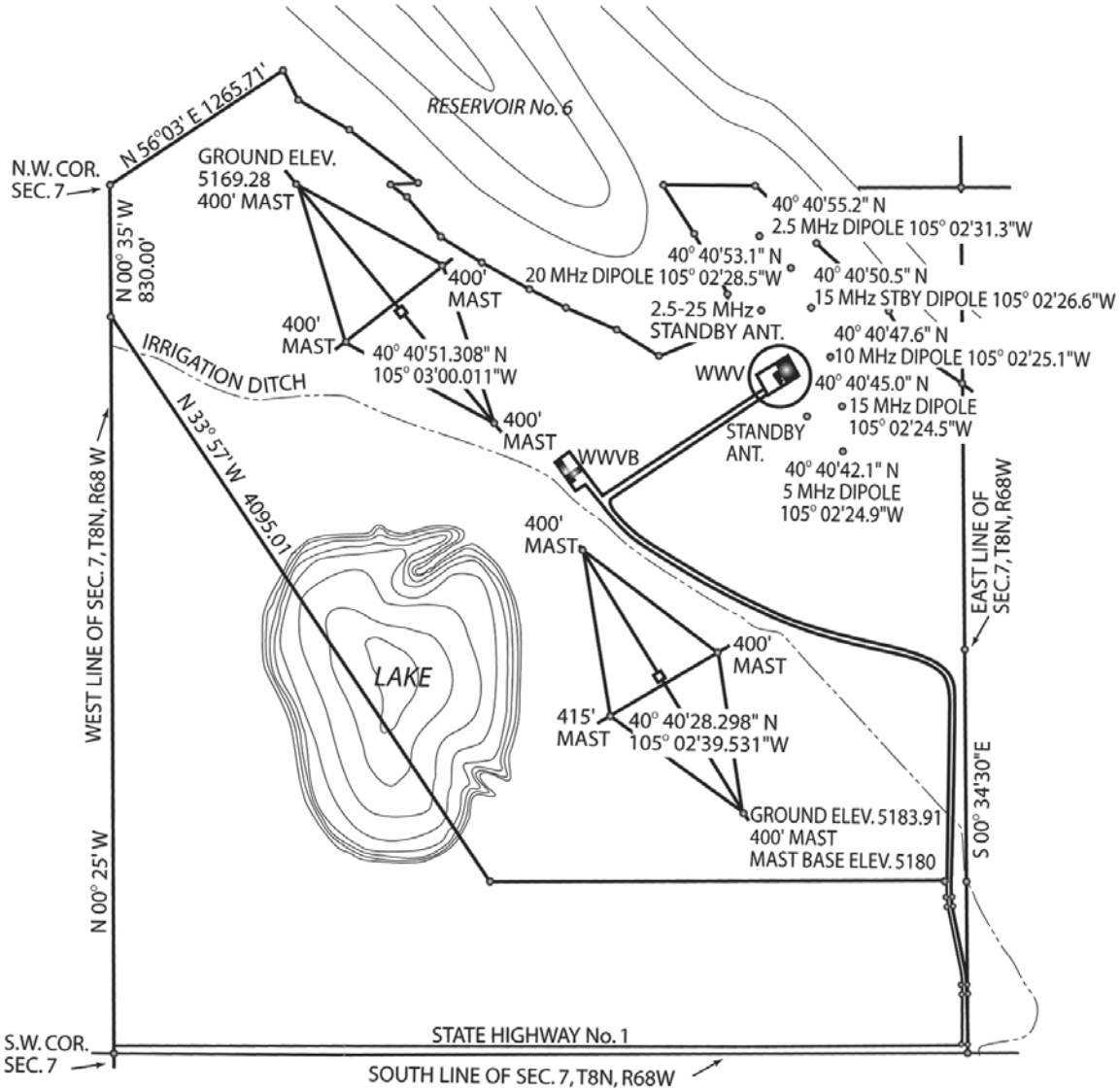

Figure 1.4. WWV and WWVB site map.

The terrain is gently rolling prairie, with crested wheat, buffalo grass, sagebrush, cactus, and other vegetation found in a dry grassland environment. Some trees have been planted; most are located near the transmitter buildings and act as wind or snow barriers as well as landscaping elements. Lawns have also been established around the transmitter buildings, watered by sprinkler systems. An aerial view of the site is provided in Figure 1.5.

Prior to its purchase by the federal government around 1960, the property was used as farmland. An irrigation ditch cuts across the property from northwest to southeast, dividing it roughly in half. Another small irrigation ditch loops across the northwest corner of the

Figure 1.5. Aerial view of the WWV and WWVB site from the south.

property. Water used for agricultural irrigation downstream flows through the ditches during the local growing season, usually May to September. Two reservoirs, North Poudre Reservoir 6 and Greenwalt Lake, border the property. Both are used for irrigation during the growing season. The water level in the reservoirs varies widely throughout the year, depending on weather conditions and irrigation demands.

A private, members-only campground is located along the southwestern shore of Reservoir 6, on the narrow strip of land between the station property and the lake. A guy cable anchor for one of the towers in the WWVB antenna arrays is placed on a peninsula extending into the northwest portion of Reservoir 6. Another peninsula extends into Greenwalt Lake; guy anchors on this peninsula once supported a tower that has since been dismantled.

b) WWV Buildings

The WWV transmitter building was completed in 1966. It is a single-story building of reinforced concrete block construction, and covers 6880 ft² (639 m²). Figure 1.6 is a photograph of the WWV building, and Figure 1.7 shows the floor plan and transmitter placement. Offices and utility areas occupy the western portion of the building. Two screen rooms, which are electrically shielded enclosures, are located in the center of the building. These rooms contain the cesium frequency standards and time code generators that supply the WWV signal to the transmitters. A laboratory area is located adjacent to the screen rooms. The transmitters are located along an operating corridor surrounding the laboratory/screen rooms on three sides. An equipment corridor runs behind the transmitters to allow access for equipment maintenance and repair. A wing to the south provides space for machine shops, and one to the north contains the emergency standby generator.

Figure 1.6. The WWV transmitter building.

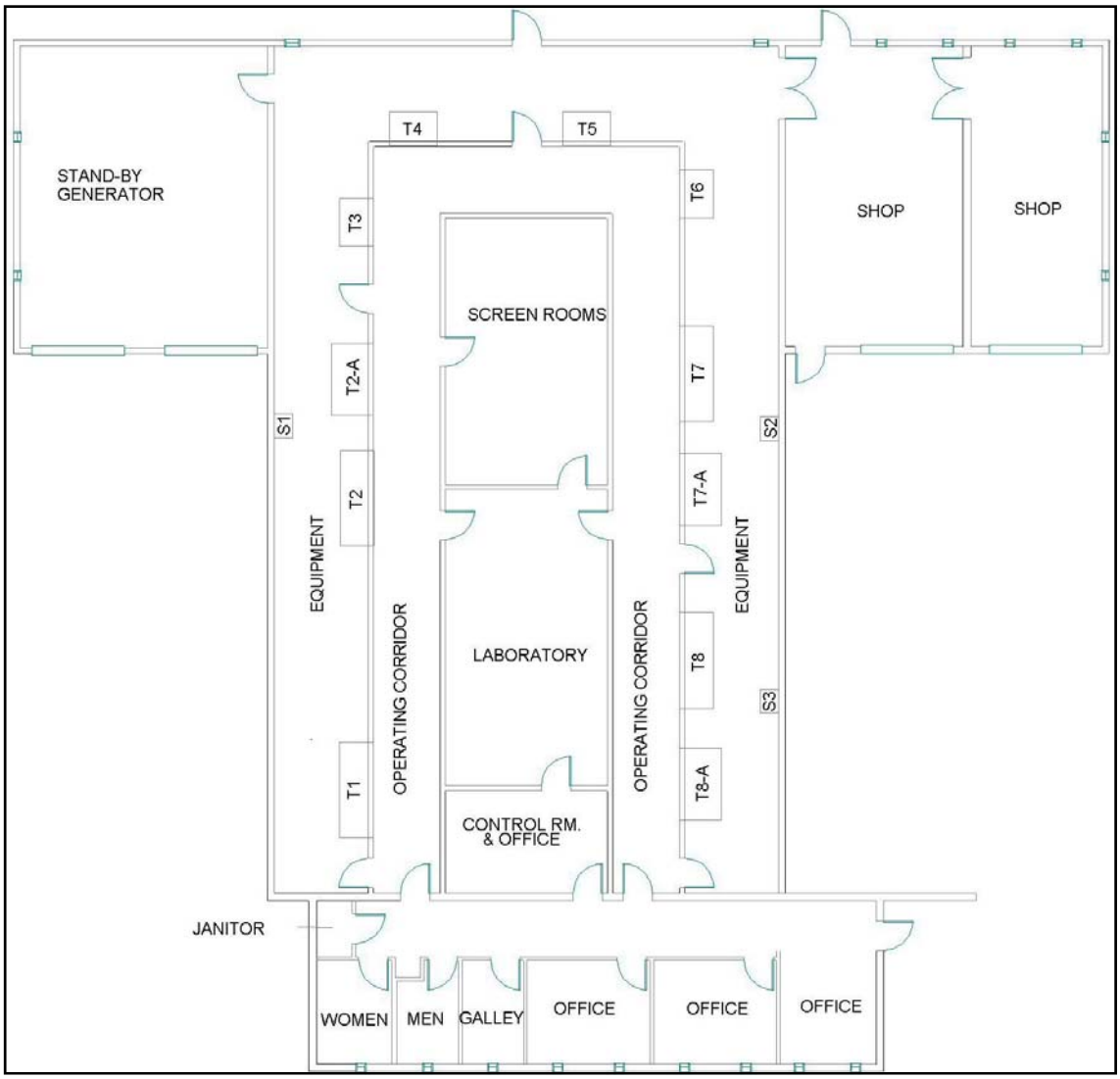

Figure 1.7. Floor plan of the WWV transmitter building.

The area containing the transmitters is cooled by a large evaporative cooler mounted on the roof. In summer, outside air is taken in and passed through moistened pads, then filtered twice before being distributed through insulated ducts to the transmitters, where it is used to cool the equipment. From the transmitters, the air is exhausted into a ceiling plenum located above the transmitter corridors. Four exhaust fans installed in the roof of the building are connected to a pressure sensor; when the plenum static pressure exceeds a set point, the fans turn on and exhaust the air to the outside. Two other manually controlled exhaust fans are ducted to the equipment corridors. During the cooler months, the washer system is turned off and drained. A thermostatically controlled set of louvers combines outside air with warmed transmitter

exhaust to keep the equipment operating and service areas at a moderate temperature while cooling the transmitters. The filters remain in use year-round.

The two screen rooms are located in an area of the building that is temperature controlled by air conditioning systems mounted on the roof. There are two separate systems; one is operating and the other in standby mode. The units are switched periodically to distribute the operating hours. They include heating coils and run year round. The systems are designed to maintain the temperature inside the screen room areas to within 1º F of the set point. The air conditioning units currently in operation were installed in the early 1990's.

The generator room on the north end of the building contains the electrical distribution gear. The utility company provides power through an oil-filled, 500 kVA, Y-connected three-phase transformer located just outside the north wall. The 208 V supply from the secondary is fed to the automatic switchgear, and then to the distribution cabinets. Fused switches are connected to the various circuit breaker panels in the building, as well as to each transmitter. The electrical distribution gear is original, installed in 1966.

In the event of a power outage, the switchgear automatically starts and connects the 250 kW standby generator to the various building loads within one minute of the outage. Because the generator is rated at a lower capacity than the utility transformer, some building loads such as shop outlets and some electric heaters are not powered by the generator.

The uninterruptible power supply (UPS) installed at WWV was manufactured by Best Power Inc., and supplies 208 V three phase power to the screen rooms and other critical loads. It is rated at 20 kVA, and has a battery capacity of 317 minutes with the existing loads as of this writing. It was installed in 2000.

c) WWV Transmitters

The original transmitters installed at WWV were manufactured by Technical Materiel Corporation (TMC) in the mid-1960's. These were military style transmitters of two types: model GPT-40K, rated at 10 kW output power and used for the 5, 10, and 15 MHz broadcasts (designated T8, T7, and T2, respectively), and model GPT-10K, rated at 2.5 kW for the 2.5, 20, and 25 MHz broadcasts and designated T4, T5, and T6. Each frequency then had a dedicated transmitter and antenna, along with two standby transmitters, T1 and T3, connected to broadband antennas that were capable of operating at any WWV frequency. When the 25 MHz service was discontinued in the mid-1970's, T6 and the 25 MHz antenna were converted for use as a standby transmitter and antenna for the 15 MHz broadcast. At about that same time, signal sensing and control circuitry was installed to allow standby transmitters to be started automatically in the event of a primary transmitter fault. Although they could be manually reconfigured for operation at any other frequency, the two broadband transmitter/antenna systems were normally set for operation at 5 and 10 MHz, thus providing automatic standby systems for the three most-used WWV broadcast frequencies. Figure 1.8 shows TMC primary transmitter T5.

New, more efficient transmitters were purchased for the 5, 10, and 15 MHz broadcasts in 1990; these new 10 kW transmitters were made by CCA Corporation and designated T8-A, T7-A and T2-A, shown in Figure 1.9. At the same time, remote control antenna switches were installed and connected to the outputs of both the new CCA transmitters and the TMC equipment they replaced. The older transmitters were then modified for use as standby transmitters for the 5 MHz and 10 MHz services; when a fault occurs on the primary CCA transmitter, the sensing circuitry automatically starts the standby TMC equipment and the antenna switch connects its output to the primary antenna. This arrangement freed the two broadband transmitter/antenna systems for use as automatic standby equipment for the 2.5 MHz and 20 MHz broadcasts.

In the process of modifying the 5 MHz and 10 MHz TMC transmitters for standby duty, it was determined that the inefficient high-power amplifier section of that equipment would be disconnected. The transmitters were reconfigured for operation at 2.5 kW output power, making them nearly identical to the 2.5 MHz and 20 MHz primary transmitters, which remain in operation. Figure 1.10 shows the configuration of the transmitters and antennas.

The station designation, configuration, and rated power for each transmitter are shown in Table 1.1.

Figure 1.8. The 20 MHz transmitter at WWV.

d) WWV Antennas and Transmission Lines

Six WWV antennas are located along the top of a ridge to the north and east of the transmitter building. The terrain in all but the southerly direction of propagation slopes downward around the antennas. This feature of the area is used to enhance the low-angle radiation of the signal. The transmitter building is situated at a lower elevation than the antennas to minimize its impact on the radiation pattern [34].

The WWV primary antennas were manufactured by Rohn, Inc. and installed when the station was built.

Figure 1.9. The 15 MHz transmitter at WWV.

They are made up of several three-sided tower sections, measuring 18.5 in (47 cm) per side, mounted on hinged steel bases fastened to concrete foundations, and are fitted with at least two sets of guy cables; they are designed to withstand winds of up to 112 mph (180 km/h). The sections are made of galvanized welded steel rod. Figure 1.11 shows one of the primary WWV antennas.

The primary antennas and the 15 MHz standby antenna are half-wave, vertically polarized dipoles. They are center-fed, that is, the connection from the transmission line is located ¼-wavelength above the ground, near the center point of the vertical mast. The bottom portion of the mast is electrically grounded. The top portion is mounted on three ceramic insulators, and makes up the upper radiating element of the antenna. The lower radiating element consists of nine ¼-wavelength copper-coated steel wires sloping downwards to the ground at a 45° angle. Each of the wires on this "skirt" is insulated from the ground with ceramic or fiberglass

Table 1.1. WWV broadcast equipment configuration.

Transmitter	Freq. (MHz)	Configuration	Power (kW)	Switch	Antenna
T1	Any WWV	20 MHz Standby	2.5	-	Broadband #1
T2*	-	Not in Service	-	#1	-
T2-A	15.0	Primary	10	#1	15 MHz Primary
T3	Any WWV	2.5 MHz Standby	2.5	-	Broadband #2
T4	2.5	Primary	2.5	-	2.5 MHz Primary
T5	20.0	Primary	2.5	-	20 MHz Primary
T6	15.0	Standby	2.5	-	15 MHz Primary
T7	10.0	Standby	2.5	#2	10 MHz Primary
T7-A	10.0	Primary	10	#2	10 MHz Primary
T8	5.0	Standby	2.5	#3	5 MHz Primary
T8-A	5.0	Primary	10	#3	5 MHz Primary

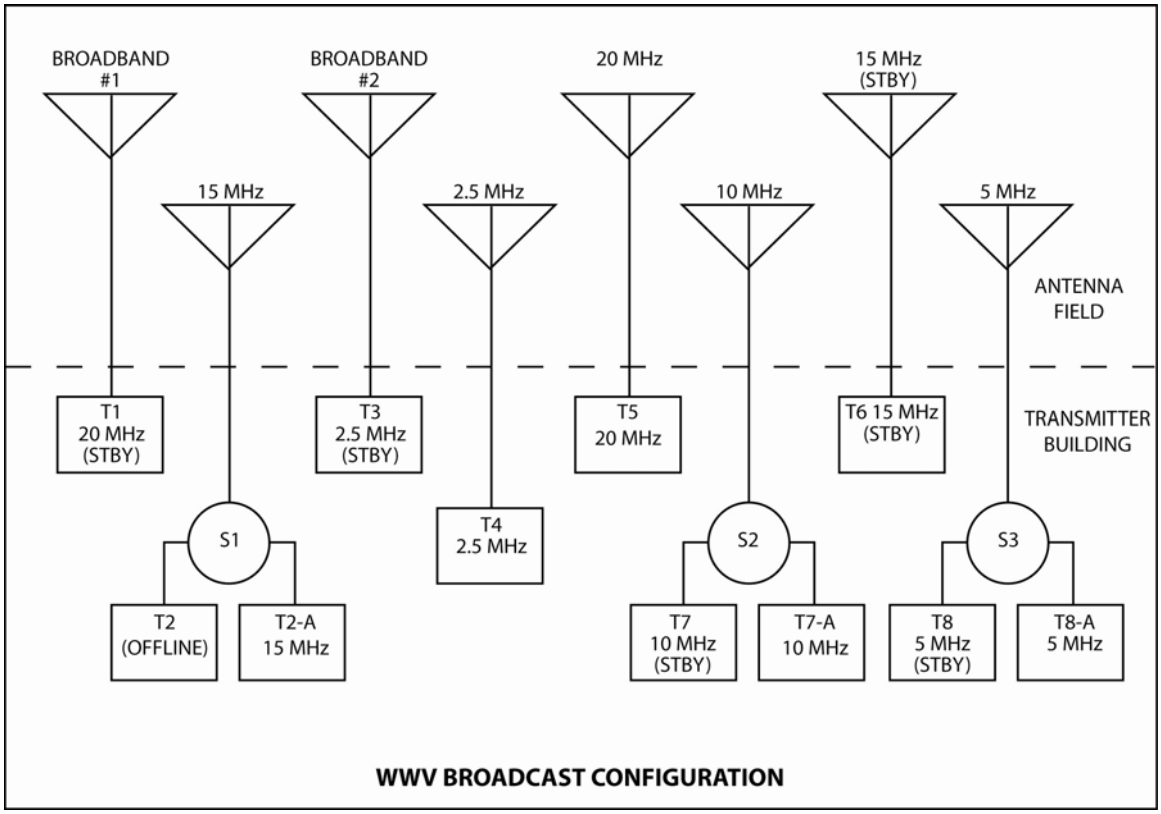

Figure 1.10. Transmitter/antenna connections at WWV.

insulators. The skirt also serves as a set of structural guy wires at the mid-point of the tower. Some WWV antennas also have a ground plane consisting of 120 tinned stranded copper wires spaced at 3° intervals and extending outward radially from the base of the mast, each terminated at a ground rod. WWV antenna data are shown in Table 1.2.

Tuning stubs are used with the WWV primary antennas. These stubs are made of short lengths of horizontally mounted rigid transmission line, one located at the base of the tower and another at 3/8-wavelength toward the transmitter, each with a shorting rod inside. The rods are moved in or out to provide the best impedance match for the transmitter, nominally 50 Ω. Once set, they usually do not require adjustment. The shorting rods also provide a DC ground for the antenna, which protects the transmitter from damage from lightning strikes. Figure 1.12 shows the details of a typical WWV primary antenna and tuning stub installation.

Two broadband monopole antennas are installed at WWV, one to the north and one to the south of the building. These model 437C-2A antennas were manufactured by the Collins Radio Company and installed when the station was built. They consist of a central tower section 88 ft (27 m) tall that rests on a ceramic base insulator, surrounded by a wire array (Figure 1.13). A ground plane consisting of 36 solid copper wires extends radially from the

tower. The wire radials are each 105 ft (32 m) long, and are terminated at copper-clad ground rods. Each broadband antenna is connected to a dedicated transmitter, and is capable of operating at any WWV broadcast frequency. No tuning stubs are used in the broadband antenna installation.

All antennas are connected to the transmitters with rigid coaxial transmission lines that are mounted a few inches above the ground on short concrete posts (Figure 1.14). Lines to the 5, 10, and 15 MHz primary antennas, as well as one broadband standby antenna, are 3 1/8 in (79 mm) in diameter, and the lines to the other antennas are 1 5/8 in (41 mm) diameter.

Figure 1.11. The 15 MHz antenna at WWV.

The lines consist mainly of 20 ft (6.1 m) long rigid sections manufactured in the 1960's by Prodelin Corporation. These were installed when the station was built, and extend from each transmitter to its antenna. Most lines also have short lengths of flexible coaxial transmission line installed to allow for bends and expansion and contraction. The flexible lengths were installed at a later date when the original rigid fittings and elbows began to fail, and were manufactured by Andrew Corporation with the trade name Heliax.

Three RF coaxial transfer switches are installed at WWV. The switches are made by Delta Electronics, type 6732E, and were installed in the early 1990's. Primary and standby

Table 1.2. WWV antenna data.

Frequency	Function	Height		Type	Coordinates	
(MHz)		(ft)	(m)		Latitude	Longitude
2.5	Primary	192	58.3	center-fed ½-wave dipole	40º 40' 55.2" N	105º 02' 31.3" W
5.0	Primary	95	30.0	center-fed ½-wave dipole	40º 40' 42.1" N	105º 02' 24.9" W
10.0	Primary	47	14.3	center-fed ½-wave dipole	40º 40' 47.8" N	105º 02' 25.1" W
15.0	Primary	31	9.5	center-fed ½-wave dipole	40º 40' 45.0" N	105º 02' 24.5" W
15.0	Standby	31	9.5	center-fed ½-wave dipole	40º 40' 50.5" N	105º 02' 26.6" W
20.0	Primary	23	7.0	center-fed ½-wave dipole	40º 40' 53.1" N	105º 02' 28.5" W
Broadband #1	Standby	88	27.0	base-fed monopole	40º 40' 44.2" N	105º 02' 29.8" W
Broadband #2	Standby	88	27.0	base-fed monopole	40º 40' 50.8" N	105º 02' 32.6" W

transmitters are connected to the inputs of the switches, and the antenna and a dummy load are connected to the outputs. This allows either transmitter to be operated into either load. The switches are designed to prevent both transmitters from operating into the same load simultaneously. Short lengths of flexible line are used inside the transmitter building to connect the transmitters to the antenna switches.

All the transmission lines are pressurized with dehydrated air to prevent moisture from entering the lines.

e) WWV Back-Up Generator

The WWV emergency standby generator is located in the generator room on the northwest end of the transmitter building. It was installed when the building was constructed in 1966. The transmitter is connected to an automatic transfer switch, which in the event of a commercial power interruption will start the generator and transfer the station loads within one minute. Sensors detect when commercial power is restored, at which time the generator continues to

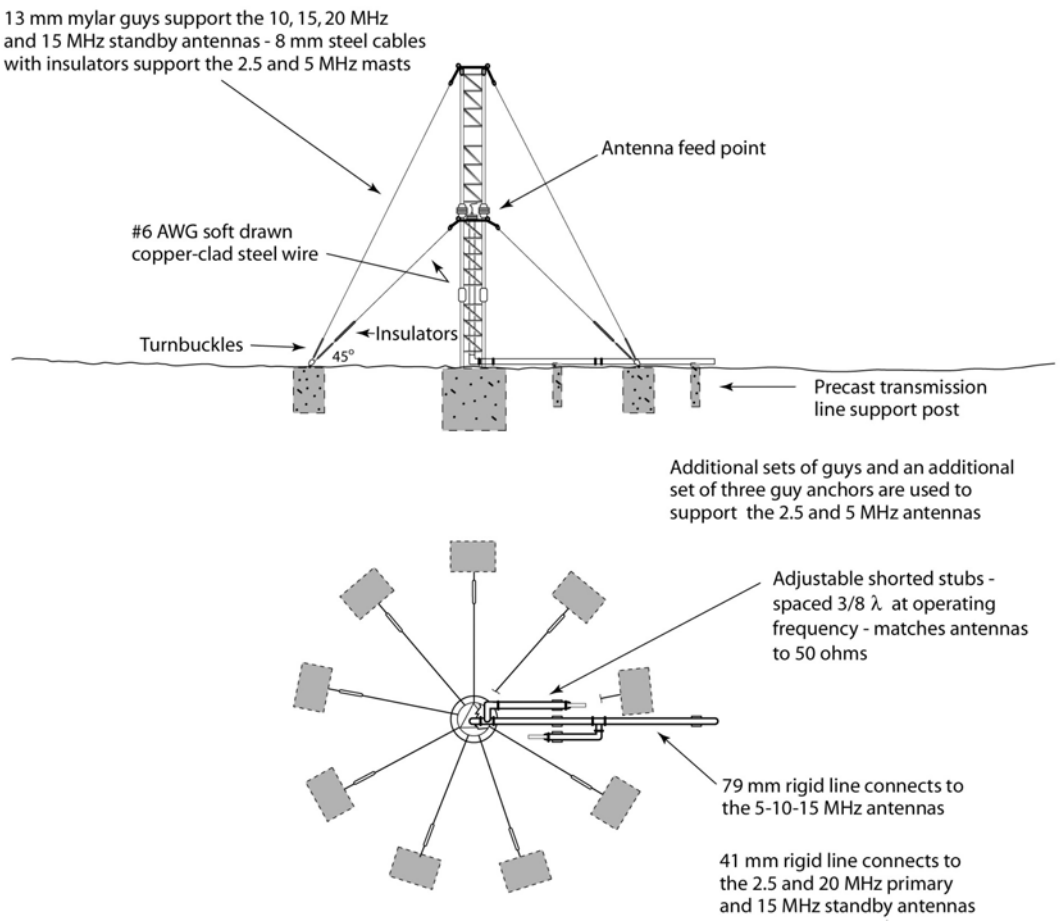

Figure 1.12. WWV primary antenna and tuning stub installation.

carry the loads for an additional time period to allow the supply to stabilize. The switch then transfers the loads back to commercial power.

The emergency standby generator is a Caterpillar model D343 series A, 208 V three-phase, 312 kVA 250 kW unit that is fed from an above ground fuel storage tank. The engine is a 384 horsepower, six cylinder diesel (power ratings at sea level). The above-ground concrete fuel tank was manufactured by Amcor Precast Inc., and installed in 1998. It has a capacity of 2000 gallons (7571 L), enough fuel to operate the station for about 4 days.

f) WWV Time and Frequency Equipment

Time and frequency equipment at WWV is installed in the temperature-controlled main screen room. The "heart" of the system is three commercially manufactured cesium oscillators.

One of the three cesium oscillators is selected as the site master clock. However, each oscillator is connected to a time code generator (TCG), as well as other distribution and monitoring equipment. The time code generators provide or insert all the voice and data information for the WWV broadcast. The WWV TCGs were made by Datachron, Inc., and installed in 1991.

The master clock/TCG system is selected to send the WWV signal to the various transmitters. However, in the event of a problem with that system, monitoring equipment automatically disconnects it and switches to one of the other TCGs.

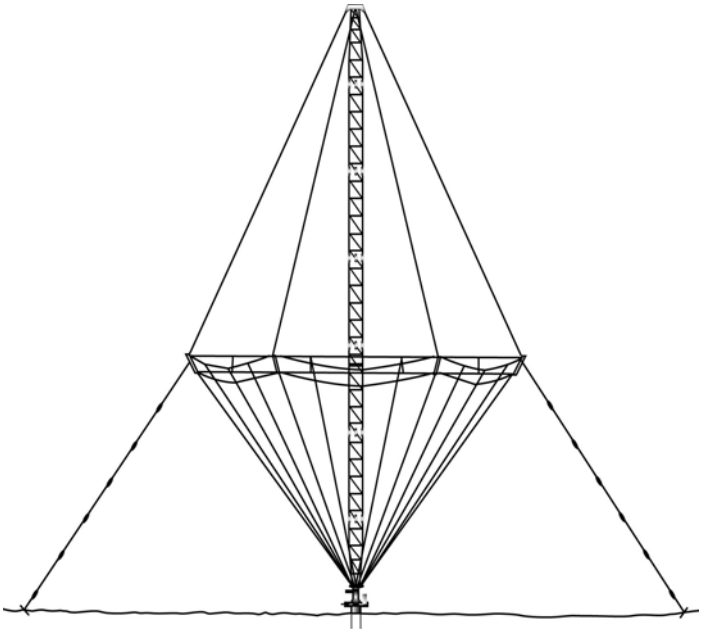

Figure 1.13. Broadband monopole antenna at WWV.

g) Other Equipment (Satellite Systems)

Other equipment installed at the station includes two satellite earth stations, one operating on the C band and the other on Ku band. They can be seen in Figure 1.4. The satellite systems are used periodically to perform time transfers with other standards laboratories, both in the United States and abroad.

The C-band equipment consists of an Andrew model 237230 4.6 m antenna, Miteq up- and down-converters and a Kamen high power amplifier rated at 20 W. The Ku-band equipment consists of a Vertex model 4.5-KPK 4.5 m antenna also with Miteq converters and a 2 W amplifier.

Figure 1.14. Transmitter to antenna transmission lines at WWV.

2. WWVB Facilities

a) WWVB Land

WWVB was first to occupy the site it now shares with WWV (See 1.a.).

b) WWVB Buildings

Construction of WWVB began in 1962. The single-story WWVB transmitter building is of manufactured steel panel construction, and was assembled on-site on a concrete slab. The original building, made by Butler Manufacturing, includes a transmitter room, two electrically shielded spaces known as screen rooms, a laboratory area, and a small restroom. It was completed in 1963. An administrative wing including two offices, a reception area, conference room, restrooms, and a small galley was added in 1966. An additional wing for more transmitters was added in 1996, and a generator room was added in 2000. In total, the WWVB transmitter building contains 5476 ft^2 (508.7 m^2) of interior space. Figure 1.15 shows a view of the WWVB building, and Figure 1.16 shows the floor plan.

Two smaller buildings known as helix houses are located underneath the antennas, near the center of each. These buildings were also made by Butler Mfg., and were assembled along with the transmitter building. They contain equipment to match the impedance of the antennas to that of the transmitters. The electrical connection from transmitter to antenna is made in the helix house. Figure 1.17 shows one of the helix houses.

Figure 1.15. View of WWVB building.

The WWVB electrical system consists of an oil-filled 500 kVA Y-connected, three-phase transformer located outside the west wall of the main building and connected to the utility power feeder. The secondary of the transformer supplies 480 V, three-phase power to the main breaker panel, which is connected to the automatic transfer switch and then to other distribution panels that feed the transmitters, some electric heaters, and outbuildings. A step-down transformer is used to provide 208 V three-phase power for all other loads. The electrical distribution system was completely upgraded from 1997 to 2001, with new panels and some new circuits.

The uninterruptible power supply (UPS) at WWVB was made by Best Power, model UT-310. It has a 208 V three-phase output, and is rated at 10 kVA. The estimated run time with a normal load is 211 minutes as of this writing. It was installed in 2000.

The transmitter rooms in the WWVB building are heated in winter by the transmitter exhaust air, which is recycled using thermostatically controlled ductwork louvers to maintain moderate room temperatures. Backup unit heaters are also installed in one of the transmitter rooms. In summer, the heated transmitter exhaust air is ducted outside, and the rooms are cooled by evaporative coolers.

The main screen room at WWVB is kept at a constant temperature by two air conditioning units, one operating and the other in standby mode. The units are switched periodically to distribute the operating hours evenly. The air conditioning units are from the original installation, but have been repaired and modified many times over the years. The auxiliary screen room at the WWVB building is heated by the lab area heating system.

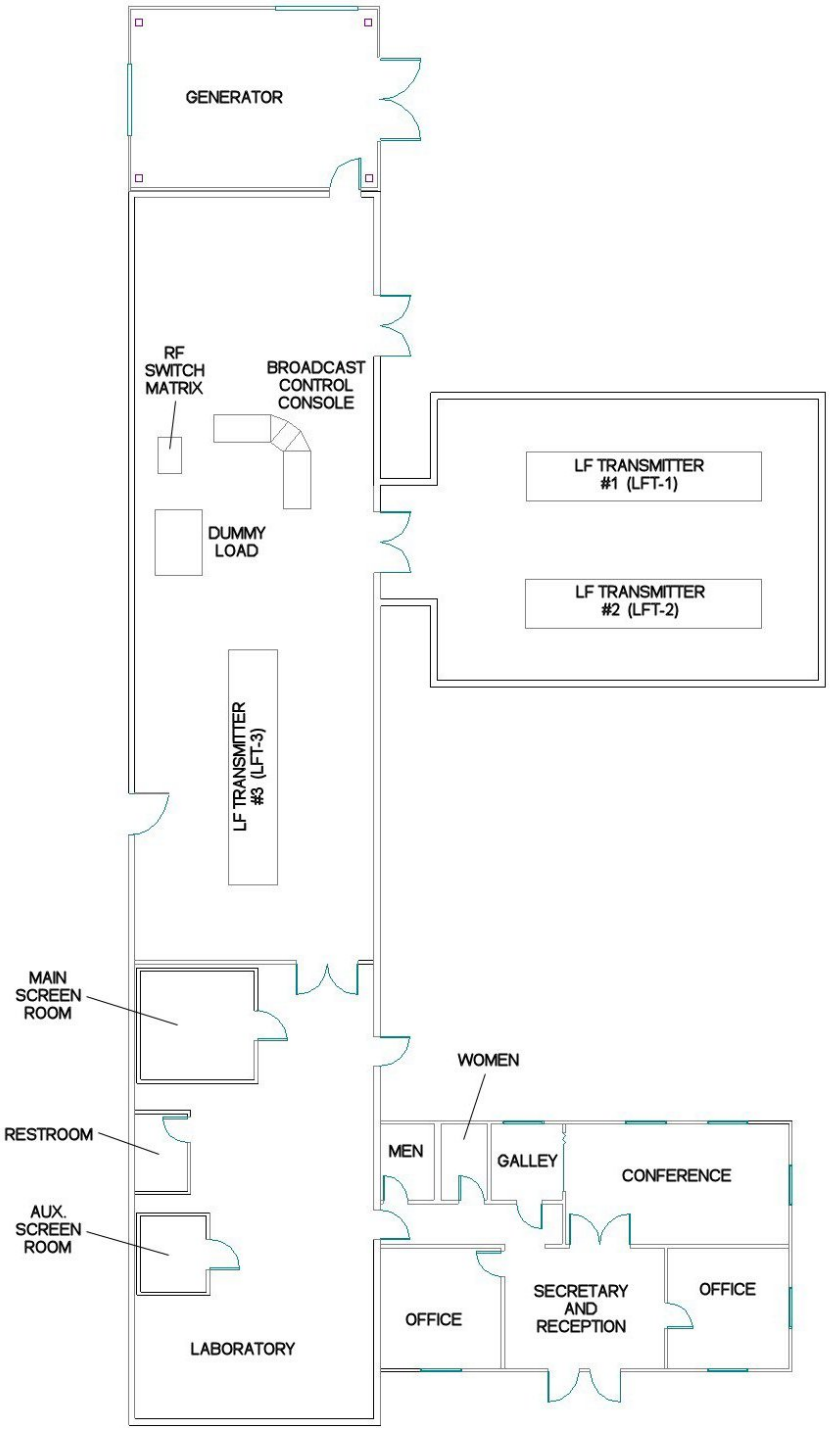

Figure 1.16. WWVB building floor plan.

c) WWVB Transmitters

Continental Electronics, Inc. originally manufactured the WWVB transmitters for the U.S. Navy. Given the model number 218B by the manufacturer, they are also known by their military designation as the AN/FRT-72. They were built in the mid-1960's and installed at various naval communications stations around the world. As time passed, the Navy began a transmitter overhaul program to upgrade and modernize the equipment. In the 1990's, the Navy began to close some of the facilities using these transmitters, and the equipment was removed and placed in storage. Discussions between agencies at the highest levels resulted in several of these transmitters and other broadcast equipment being transferred to NIST beginning in the mid-1990's to replace WWVB's obsolete equipment.

Figure 1.17. WWVB helix house.

Currently, three AN/FRT-72 transmitters are installed at WWVB, and designated as low frequency transmitters LFT-1, LFT-2, and LFT-3. All have all been overhauled as part of the Navy's transmitter overhaul program, with further upgrades performed by NIST. Each transmitter consists of six cabinets housing different elements of the equipment. The transmitter cabinets are arranged side-by-side, and the entire transmitter is 24 ft (7.3 m) long by 3 ft (0.9 m) deep and 6.5 ft (2 m) high. The transmitters are rated for 50 kW average power output at 100 % duty cycle. They are wired for 480 V input, and require about 140 kVA of power per transmitter to operate at normal output levels. Figure 1.18 shows one of the WWVB transmitters.

The transmitters are controlled from a control console and RF switch assembly located in the main transmitter room near LFT-3. Using the RF switch, known as a switch matrix, an operator can connect any transmitter to either antenna or a dummy load. The control console allows an operator to select single or dual antenna operation, as well as energize and set power output levels for the transmitters, and also monitor forward and reflected power levels, antenna current, configuration status, utility power quality, and weather information. Figure 1.19 shows the WWVB broadcast equipment configuration. Figure 1.20 shows the dummy load on the left, and the switch matrix on the right.

d) WWVB Antennas

The two WWVB transmitting antennas are situated to the northwest and southeast of the transmitter building. They are referred to as the north and south antennas. Figure 1.21 shows an artist's

Figure 1.18. WWVB transmitter.

rendering of the WWVB antennas. Although the two top-loaded monopole antenna systems are nearly identical, the north antenna was originally used for the 20 kHz WWVL broadcast. The antennas were designed by W.W. Brown, consultant to NBS, and were erected in 1962–63. Each antenna system consists of three parts: four towers, a capacitance hat or top hat and downlead, and the ground plane.

The four towers in each antenna system are arranged in a diamond pattern. Each tower is held in place by three sets of guy cables, with three cables in each set. All towers except tower 2 in the south antenna are 400 ft (122 m) high; tower 2 is 415 ft (126.5 m) high, due to its base being at a lower elevation than the bases of the other towers. The towers are made of welded steel rod in 30 ft (9.1 m) sections. Each section has three sides that measure 4 ft (1.2 m) per side. The sections are stacked and bolted one on top of another, and are painted red and white in accordance with Federal Aviation Administration regulations. Red flashing beacons and side marker lights are installed on each tower. The lights are controlled by a photocell, or light-activated switch, and are turned on automatically when daylight fades. The towers are electrically grounded at their bases; insulators are installed on each guy cable near the guy anchor.

The towers support the aerial elements of the antenna, known as the capacitance hat or top hat and the downlead. The top hat is a series of aluminum cables arranged horizontally in a diamond shape, with a tower at each corner of the diamond. The top hat is not fastened directly

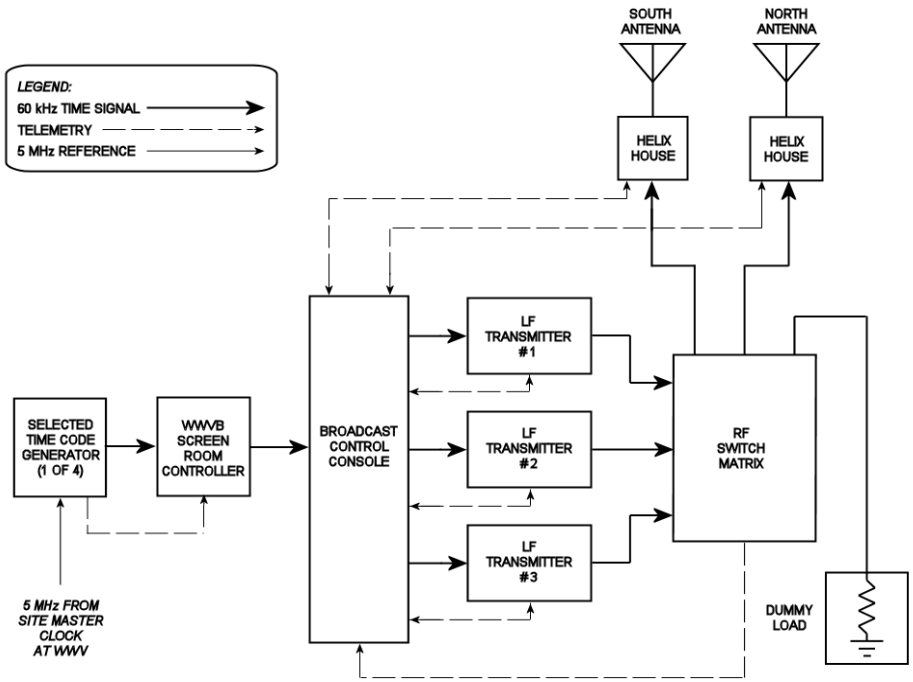

Figure 1.19. WWVB broadcast equipment configuration.

to the towers but instead is connected to porcelain insulators, which in turn are connected to steel cables that extend down the face of each tower to a 5000 lb (2268 kg) concrete counterweight near the base. This allows the top hat to be electrically isolated from the towers. The cables run over sheaves mounted at the top of each tower. This arrangement allows the top hat to "float" between the towers, tensioned by the counterweights that keep it nearly parallel to the ground. Figure 1.22 shows the antenna connections at the top of one tower, and Figure 1.23 shows a counterweight assembly. The downlead is made up of six aluminum cables with steel cores arranged around a ring form 6 in (152 mm) in diameter. It extends downwards from the center of the top hat to a point about 93 ft (28.4 m) off the ground, where it is connected through an insulator to a tensioning cable that keeps this portion of the downlead nearly vertical. The tensioning cable is connected to another counterweight structure located on the ground, which contains a concrete counterweight, also weighing about 5000 lb (2268 kg). Opposite the tensioning cable, the downlead continues at an

Figure 1.20. Dummy load and switch matrix..

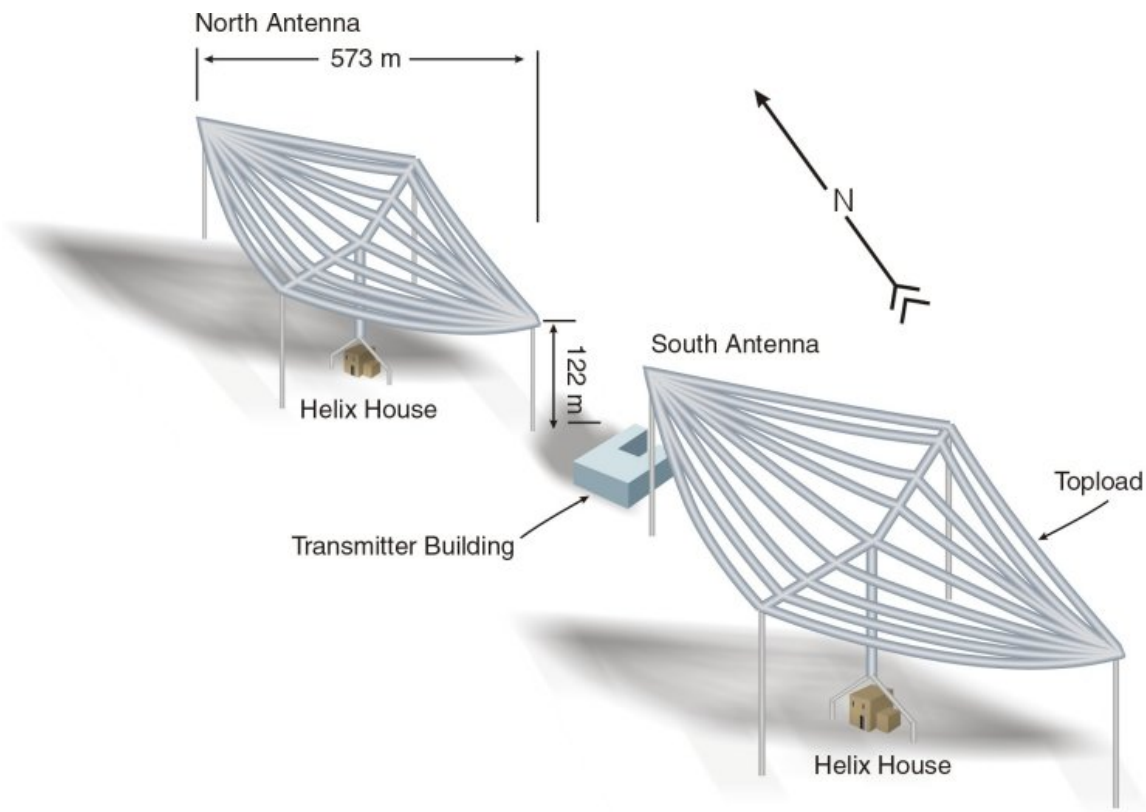

Figure 1.21. WWVB antennas.

angle to an insulator on top of the helix house. The electrical connection to the transmitter is made through the insulator.

The ground plane is a series of uninsulated wires buried in the ground underneath the antenna arrays. Two ground planes have been installed as part of the WWVB antennas. The first, installed when the station was built, consisted of a network of wires buried in a grid pattern around the antennas and the transmitter building. It was discovered that the bare copper wires used in this installation deteriorated quickly in the soil, so another ground plane was installed some years later. This plane used tinned copper braid, which resisted corrosion. The new ground plane consisted of 300 wires per antenna, radiating out approximately 1300 ft (396 m) from the helix houses. The wires are buried 8 to 10 in (200 to 250 mm) deep, and are electrically connected to the grounded end of the antenna matching equipment.

e) WWVB Back-Up Generator

The emergency standby generator was installed in 2000 in the newly constructed generator room at the northwest end of the WWVB building. It replaced a smaller unit that was installed outside. It is connected to an automatic transfer switch, which in the event of a commercial power interruption will start the generator and transfer the station loads within one minute.

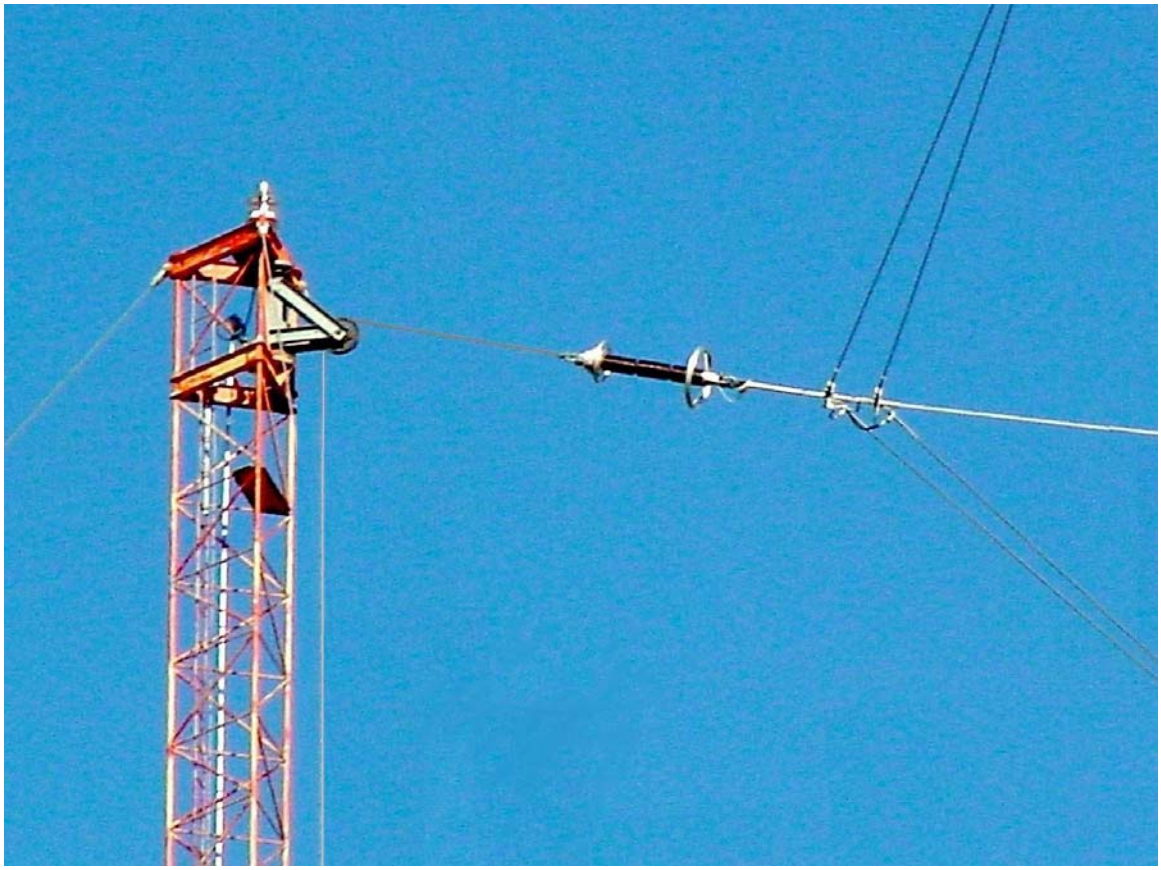

Figure 1.22. Antenna to tower connection detail.

Sensors detect when commercial power is restored, at which time the generator continues to carry the loads for an additional time period to allow the supply to stabilize. The switch then transfers the loads back to commercial power.

The WWVB emergency standby generator is an Onan model DFED-3370866. It is standby rated at 625 kVA, 500 kW at sea level, and has a 480 V three-phase output. The engine is a six cylinder supercharged diesel rated at 755 horsepower at sea level, fed from a 1000 gallon (3785 L) above ground fuel storage tank which was installed in 1998. The generator was installed in 2000.

f) WWVB Time and Frequency Equipment

WWVB time and frequency equipment consists of four time code generators (TCGs) located in the WWVB main screen room. These units (Model 9110) were manufactured in the late 1970's by Datum, Inc. Various distribution and monitoring equipment are also located in the screen room.

The selected TCG is connected to a reference frequency that is supplied by the site master clock, located in the WWV building about ¼ mile (0.4 km) away and sent to the WWVB building via underground cables.

Figure 1.23. Tower counterweight.

3. WWVH Facilities

a) WWVH Land

WWVH occupies a 30 acre (12 hectare) site near the town of Kekaha, on the western side of the island of Kauai, Hawaii. The land is leased from the U.S. Navy, and is surrounded by the Navy's Barking Sands Pacific Missile Range Facility. The parcel is located on the shoreline of the island. A map of Kauai, showing the location of the station is shown in Figure 1.24. The terrain is flat, coastal land, with a few low dunes next to the beach. Figure 1.25 shows a view of the building from the entrance, and Figure 1.26 shows an aerial view of the site. The soil is mostly sand. Shoreline scrub and bushes cover the site, with a few low trees. A lawn area has been established around the building, with palm trees, ornamental bushes and flowering plants.

b) WWVH Buildings

The WWVH transmitter building is a single story concrete block structure located at the eastern edge of the site. It was built in 1971, and covers a total area of 4482 ft^2 (416.4 m^2). The building contains a transmitter room, along with laboratory space, two screen rooms, a reception area, several offices, a small kitchen, and restrooms. A central corridor runs the length of the building from the reception area to the transmitter room entrance. A wing on the south side of the building contains electrical distribution equipment and a standby generator. Figure 1.27 shows the floor plan of the WWVH building.

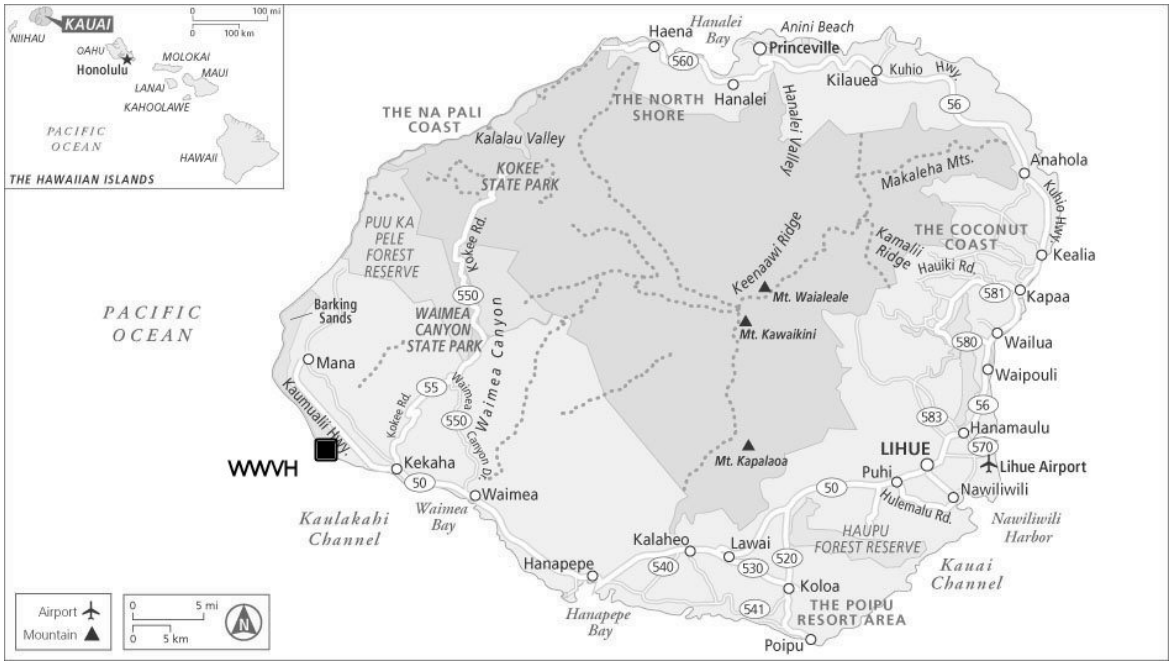

Figure 1.24. Map of Kauai, Hawaii.

The transmitter room is cooled by two split-system air conditioning systems; the transmitters are cooled by outside air that is ducted to the transmitter air intakes. Warm exhaust air is ducted outside.

The two screen rooms are located near the center of the building. The main screen room is where the broadcast time code generators and cesium clocks are located; an adjacent auxiliary screen room is used for monitoring equipment as well as any work that requires an electrically shielded environment. The rooms are cooled by an air conditioning system of the split-system type, mounted inside the main screen room. The split systems have an evaporator and fan unit mounted on an interior wall, connected with piping and wiring to a condenser and compressor unit located outside. Both systems cool the main screen room directly, and cool air is ducted from the main to the auxiliary screen room.

Figure 1.25. Entrance to WWVH site.

Figure 1.26. View of WWVH site from the top of the 5 MHz antenna.

c) WWVH Transmitters

WWVH operates on four frequencies: 2.5, 5, 10, and 15 MHz, with a primary transmitter and standby transmitter for each frequency. The first transmitters installed at the current WWVH site were made by AEL Corporation and installed in 1971. Seven of this type were originally installed; in 1983, two were removed and replaced with three newer, more efficient transmitters made by Elcom-Bauer Corporation. These units became the primary transmitters on 5.0, 10.0 and 15.0 MHz; Figure 1.28 shows the Elcom-Bauer 5 MHz primary transmitter. One of the older units was retained as the primary 2.5 MHz transmitter, while the others were modified to be used as standby transmitters. Figure 1.29 shows the AEL 15 MHz standby transmitter. Table 1.3 shows the WWVH transmitter configuration

d) WWVH Antennas

The WWVH antennas are of two types: omnidirectional and phased array. The omni-directional antennas radiate the same power level in every horizontal direction away from the tower, while the phased-array antennas are designed to radiate more power toward the west of the station. The 2.5 MHz antennas as well as the permanent standby antennas are omnidirectional towers, while the 5.0, 10.0, and 15.0 MHz primary antennas are phased arrays. The 15 MHz standby antenna is a temporary, prototype phased array consisting of two quarter-wave monopoles. The WWVH antennas are described in more detail in Table 2.7 in Chapter 2.

A 41 ft tall (12.5 m) grounded steel tower serves as a platform for various HF and National Weather Service receiving antennas, but is not used for the time and frequency broadcasts.

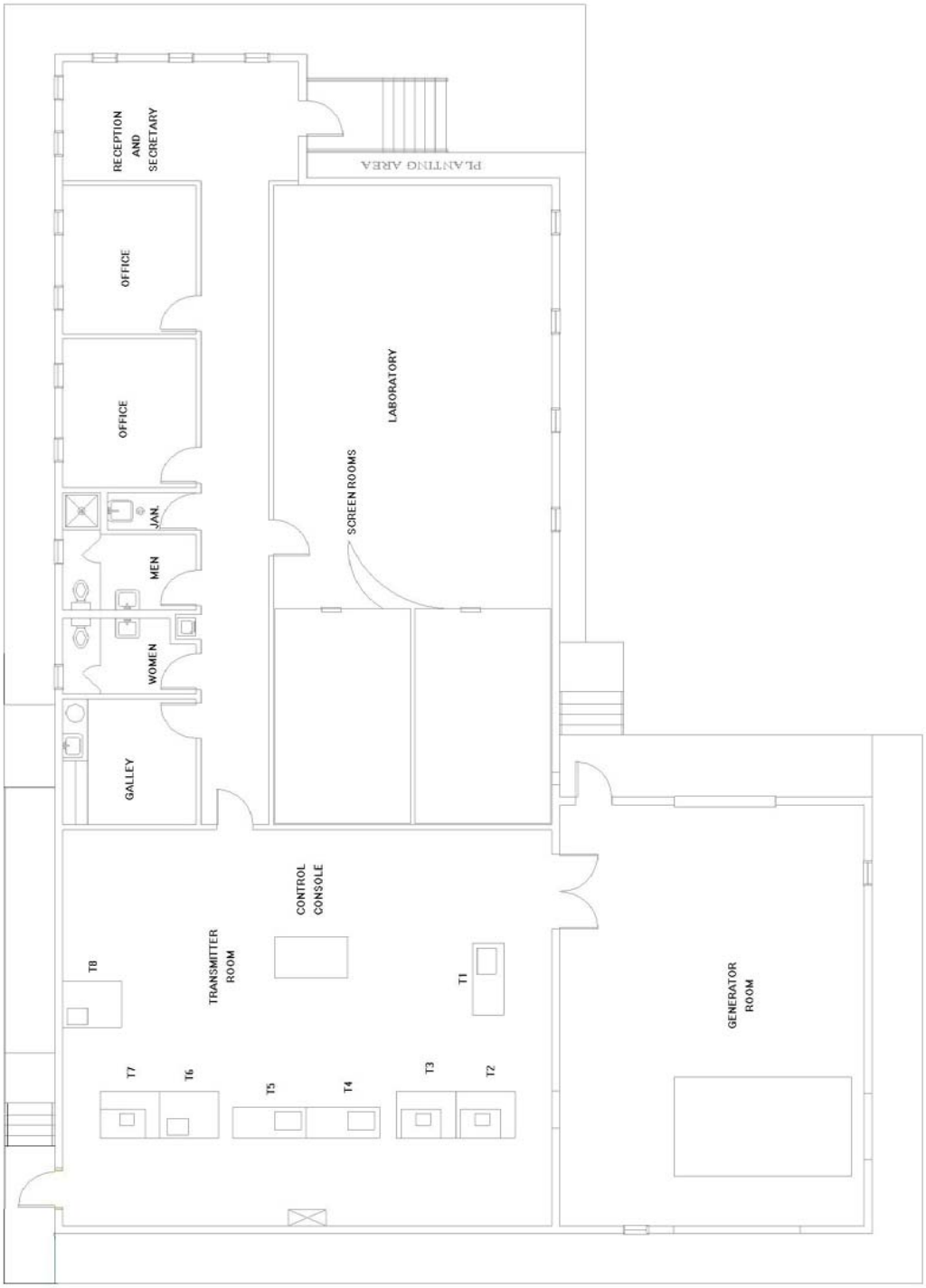

Figure 1.27. WWVH building floor plan.

Figure 1.28. The 5 MHz transmitter at WWVH.

The original omni-directional towers were vertical steel structures made by Rohn or Collins, similar to the WWV antennas. However, due to the high humidity and salt spray from the nearby ocean, these towers required much more maintenance and upkeep. Beginning in 2001, these antennas were replaced by free-standing fiberglass masts (also known as whip antennas), manufactured by Valcom Ltd. The new monopole antennas are made up of several hollow, tapered epoxy-fiberglass sections, which are joined together end-to-end with threaded bronze ferrules. Embedded in the epoxy-fiberglass sections are strips of copper extending the length of each section, usually in a spiral and connected to the threaded ferrules. The top section is capped either with a bronze corona sphere or a hoop shaped capacitive element. The base of the bottom section flares outward to meet the mounting flange. The embedded copper strips end at the feed point about 46 cm above the flange, thus the bottom 46 cm of the mast forms the base insulator. No guy cables are required. Figure 1.30 shows one of the whip antennas.

Figure 1.29. The 15 MHz standby transmitter at WWVH.

The fiberglass whip antennas have external matching equipment located in a weatherproof box next to the antenna base. All whip antennas are mounted on hinged stainless steel plates, that allow the tower to be lowered for painting or maintenance. Ground planes are installed at each tower, consisting of 120 solid copper wires extending radially outward from a center ring at the base of the tower. The wires are buried several inches deep, and each wire is terminated to a ground rod, a 10 ft (3 m) long copper-coated steel rod driven into the earth. The lengths of the ground radials vary, depending on the frequency for which the tower was designed [35].

The primary phased-array antennas were manufactured by Rohn Inc., and installed when the station was built in 1971. Each array consists of two half-wave dipole towers spaced a quarter-wavelength apart. Each tower consists of stacked three-sided steel sections, with

Table 1.3. WWVH transmitter configuration.

Transmitter designation	Frequency (MHz)	Configuration	Power (kW)	Antenna
T1	**5**	**Primary**	**10**	**5 MHz Primary**
T2	**Any WWVH**	**5 MHz Standby**	**5**	**Broadband #1**
T3	**15**	**Standby**	**5**	**15 MHz Standby**
T4	**15**	**Primary**	**10**	**15 MHz Primary**
T5	**10**	**Primary**	**10**	**10 MHz Primary**
T6	**2.5**	**Primary**	**5**	**2.5 MHz Primary**
T7	**Any WWVH**	**10 MHz Standby**	**5**	**Broadband #2**
T8	**2.5**	**Standby**	**5**	**2.5 MHz Standby**

ceramic insulators near the mid-point of the tower. A drawing showing an overhead and side view of a phased array can be seen in Figure 1.31. The antennas are center-fed, that is, the connection from the transmission line is located near the electrical center point of the vertical masts. The bottom portions of the masts are electrically grounded. The top portions are each mounted on three ceramic insulators, and make up the upper radiating elements of the antenna. The lower radiating elements consist of nine copper-coated steel wires per tower sloping downward to the ground at a 70° angle. Each of the wires on these "skirts" is isolated from electric ground using ceramic insulators. The skirts also serve as a set of structural guy wires. The antennas also have a ground plane consisting of 120 copper wires spaced at 3° intervals, extending outward radially from the base of both masts, each terminated at a ground rod. Figure 1.32 shows the 15 MHz primary antenna.

Each phased array antenna is connected to a stub tuning network, located at the base of the towers. This network is made of sections of 1 5/8 in (41 mm) diameter rigid coaxial transmission line, and allows the antennas to be matched precisely to the impedance of the transmitters. Flexible transmission line is run from the stub tuning networks to the transmitters. It was installed when the stations were built. The 1 5/8 in (41 mm) transmission line is buried 3 ft (0.9 m) underground for the length of the run, coming to the surface at the building and antenna.

e) WWVH Back-Up Generator

The WWVH emergency standby generator was installed in April 2003 in the generator room at the southwest end of the WWVH building. It replaced the original unit, which was becoming unreliable due to age. It is connected to an automatic transfer switch, which in the event of a commercial power interruption will start the generator and transfer the station loads within 20 s. Sensors detect when commercial power is restored, at which time the generator continues to carry the loads for an additional 30 minutes to allow the supply to stabilize. The switch then transfers the loads back to commercial power.

The WWVH emergency standby generator was manufactured by Kohler. It is standby rated at 525 kVA, 425 kW at sea level, and has a 208 V three-phase output. The engine is a six cylinder, 14.0 L (855 cu in), turbocharged diesel rated at 635 bulk horsepower at sea level, fed from a 2000 gallon above ground fuel storage tank which was installed in 1991.

Figure 1.30. Fiberglass whip antenna at WWVH.

f) WWVH Time and Frequency Equipment

The time and frequency equipment installation at WWVH is very similar to that at WWV. Equipment is installed in the temperature-controlled main screen room. Three commercially manufactured cesium oscillators are installed in three separate racks, and one of the three oscillators is selected as the site master clock. However, each oscillator is connected to a time code generator (TCG), as well as other distribution and monitoring equipment. The time code generators provide or insert all the voice and data information for the WWVH broadcast. The WWVH TCGs were made by Datachron, Inc., and installed in 1991; they are similar but not identical in design to the WWV time code generators.

The master clock/TCG system is normally selected to send the WWVH signal to the various transmitters. However, in the event of a problem with that system, monitoring equipment automatically disconnects it and switches to one of the other racks.

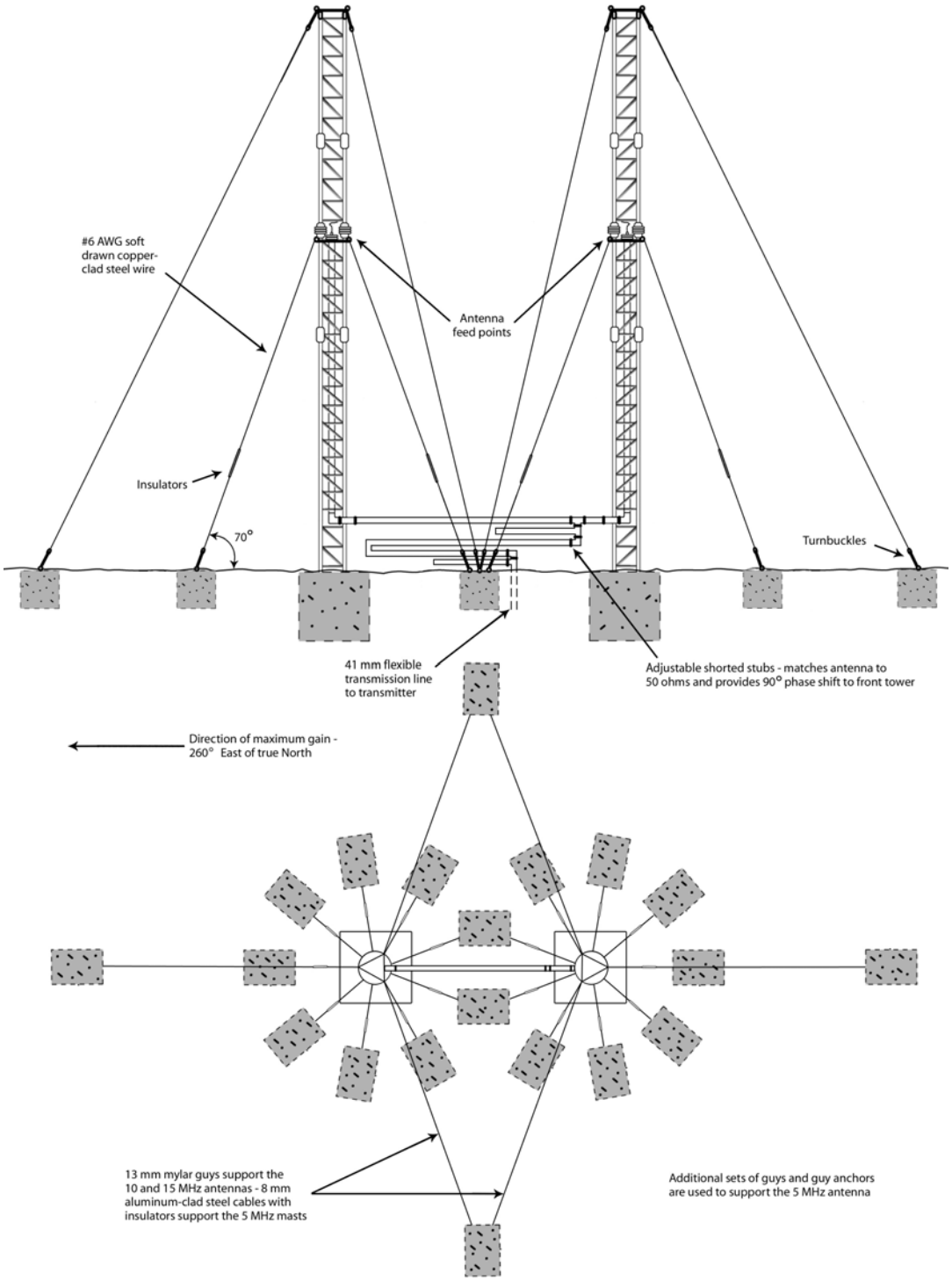

Figure 1.31. Phased-array antenna at WWVH.

Figure 1.32. 15 MHz antenna at WWVH.

C. Organizational Control of NIST Radio Stations

Each NIST Radio Station is managed, controlled, and maintained by the Services Group of the NIST Time and Frequency Division. The engineer-in-charge (EIC) at each station reports to the Group Leader of the Services Group, who reports to the Division Chief of the Time and Frequency Division, who in turn reports to the Director of the NIST Physics Laboratory. The Physics Laboratory is one of the seven operational units of NIST, which is an agency of the United States Department of Commerce's Technology Administration.

The staff at the radio stations currently consists of an EIC, a technical staff, and one administrative staff member. WWV and WWVB have a combined staff, with one EIC, three electronics technicians, and a part time administrative assistant. The WWVH staff consists of the EIC, two technicians, and an administrative assistant.

Normal staff working hours are from 6:30 a.m. to 5:00 p.m. Mountain Time, Monday through Friday at WWV/WWVB, and 7:30 a.m. to 4:00 p.m. Hawaii Time, Monday through Friday at WWVH. Staff members are on call outside these hours for emergency response due to broadcast outages.

This page is intentionally left blank.

Chapter 2

Technical Description

This chapter provides a technical description of how the NIST radio stations work. It describes the equipment used at each station to broadcast standard time and frequency signals to the United States.

A. How the NIST Radio Stations Work

The mission of the NIST Radio Stations is to distribute NIST time of day, time interval, and standard frequency information to industry, government, and the general public in the United States. The time and frequency information contained in the broadcasts is derived from the NIST Time Scale, UTC(NIST), which is maintained in Boulder, Colorado. UTC(NIST), an ensemble of commercial cesium and hydrogen maser oscillators, is calibrated using the NIST Primary Frequency Standard, which as of this writing is a cesium fountain oscillator known as NIST-F1. UTC(NIST) is disseminated using a variety of means besides the radio stations (Figure 2.1). Other broadcast services operated by the NIST Time and Frequency Division include the Telephone Time of Day system discussed later, the Internet Time Service (ITS), the Automated Computer Time Service (ACTS), and the time.gov web sites [36].

The radio stations are each equipped with a set of three commercial cesium oscillators or frequency standards (WWV and WWVB share one set). The frequency standards are compared with UTC(NIST) every working day using the GPS common-view technique, and steered when necessary. They are connected to monitoring equipment that constantly compares their outputs and removes one from service if it fails.

One of the oscillators is selected as the station standard, or site master clock. This standard is connected to a time code generator, which creates the signal that is fed to the transmitters for broadcasting at the various frequencies. The time code generators are also monitored for accuracy. The WWV and WWVH audible signals are also sent to the telephone time-of-day equipment, where they can be accessed by telephone.

The WWV and WWVH broadcast formats are very similar. The most obvious difference to the listener is that the WWV voice time announcements are made using a male voice, and the WWVH announcements use a female voice to avoid confusion between the two stations since both can be received in some areas.

Since WWVB is located at the same site as WWV, these two stations share one site master clock. Separate WWVB time code generators develop the WWVB broadcast format which is transmitted at 60 kHz. The WWVB broadcast contains a machine readable time code, but no audio information.

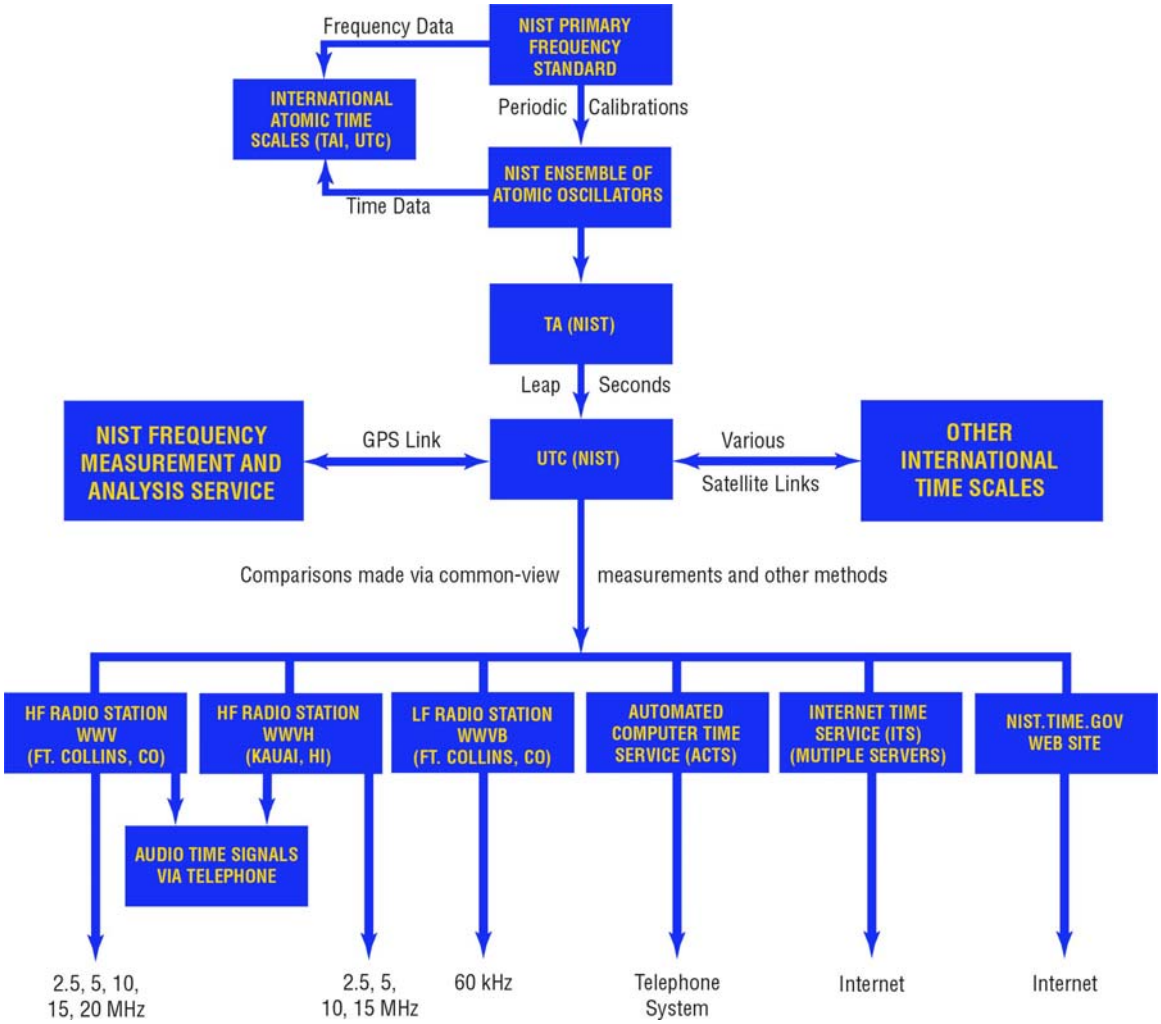

Figure 2.1. The distribution of UTC(NIST) through the NIST time and frequency services.

B. Technical Description of WWV

1. Timing system

The frequencies broadcast by WWV and WWVB, as well as time information for WWV originate in the WWV screen room. There, three independent time and frequency generation systems operate continuously. Two of the systems are configured to provide the signals to the WWV primary transmitters and WWVB, and the other system feeds the standby transmitters at WWV. However, the control equipment in the screen room allows only one system or rack to be "on the air" at any one time; the other two systems are used for comparisons, and for standby purposes in case the online rack fails. The online rack is designated as the site master clock.

Figure 2.2 shows a simplified block diagram of a WWV broadcast equipment rack and its interconnections with monitoring and control equipment. Each system is made up of a commercial cesium frequency standard, a frequency divider/distribution amplifier, a time code generator (TCG), monitoring and ancillary outputs, and an equipment rack. Each cesium frequency standard produces an extremely stable 5 MHz frequency reference output that is fed to a divider/distribution amplifier that distributes the signal to the time code generator, a 5 MHz to 1 pulse-per-second (pps) divider, and the Frequency Measurement and Analysis System (FMAS) [37]. The 5 MHz is also divided to 1 MHz and sent to the screen room controller.

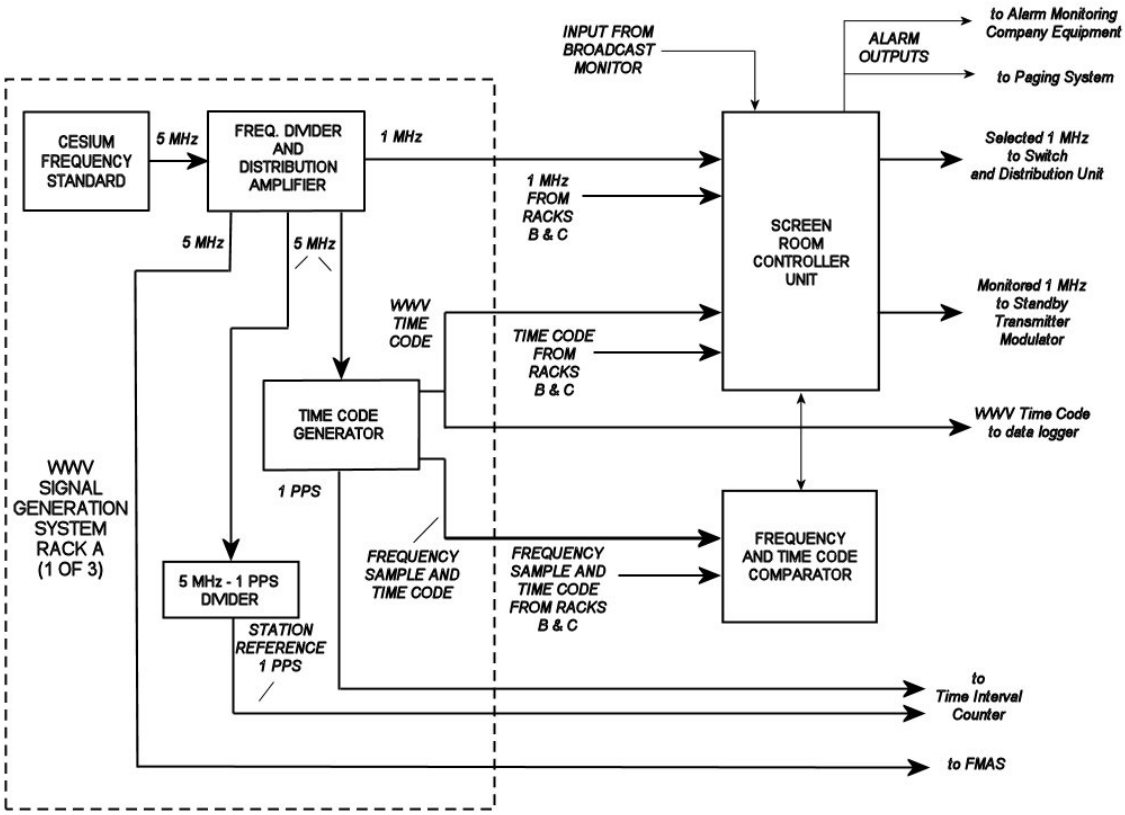

Figure 2.2. WWV broadcast equipment rack.

One of the two systems that provides the signals to the primary WWV and WWVB transmitters is designated as the site master clock. This system forms the basis of all the frequencies used or transmitted at WWV and WWVB.

2. Broadcast Format

The WWV broadcast format consists of several elements. The format contains standard carrier frequencies, standard audio frequencies, time intervals, voice time announcements, a binary

coded decimal (BCD) time code, and official announcements. All elements except the standard carrier frequencies are in the audio frequency range. WWV and WWVH broadcast an identical BCD time code; the carrier and all the tones broadcast are derived from the site master clock [38]. The five WWV carrier frequencies (2.5 MHz, 5 MHz, 10 MHz, 15 MHz, and 20 MHz) also serve as standard frequencies. This means they are suitable for frequency calibration purposes, within the limitations of the receiving equipment (see Chapter 5).

All audible frequencies and tones are generated in the TCGs, which use their associated cesium oscillator as a frequency standard. Voice time announcements as well as the station identification message originate in the time code generator, using a pre-recorded male voice. Official announcements are stored in a separate voice storage system, which is accessed periodically via telephone by the announcers. The WWV audio signal generation and distribution system can be seen in the simplified block diagram in Figure 2.3.

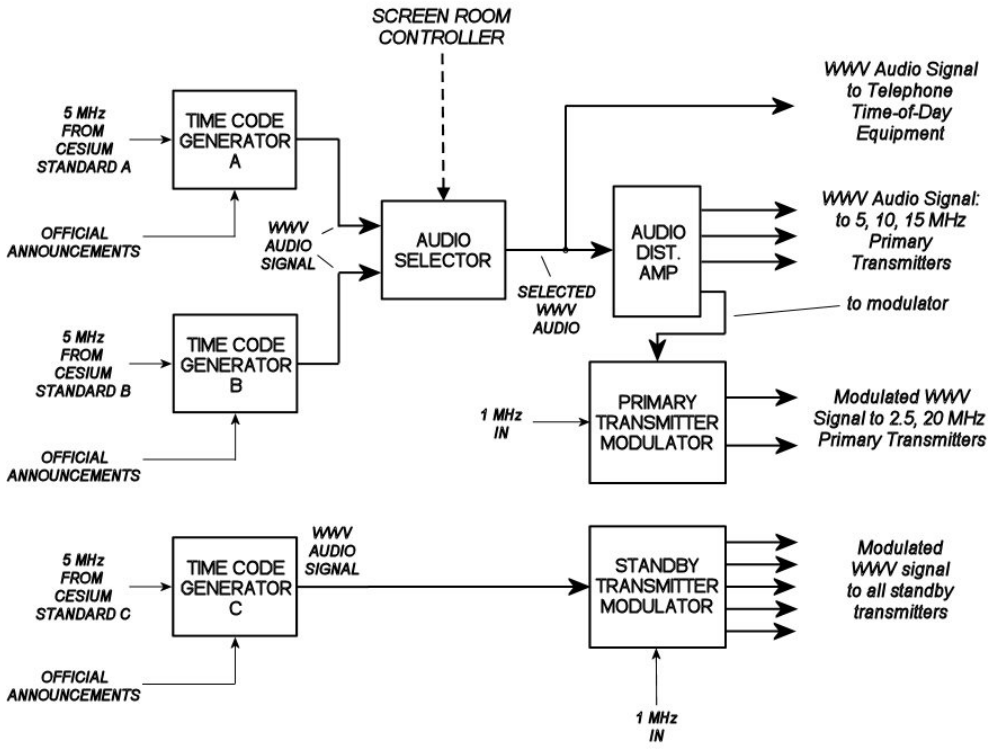

Figure 2.3. WWV audio signal generation and distribution system.

a) Standard Carrier Frequencies

The WWV standard carrier frequencies are derived directly from the site master clock. Figure 2.4 shows a simplified block diagram of the standard carrier frequency generation system. A 1 MHz signal is sent from each time and frequency generation system rack to the screen room controller. The controller sends the selected signal from system A or B to the 1 MHz switch and distribution unit. From there, the signal is sent directly to the 5, 10, and 15 MHz primary transmitters, and also to the 2.5 and 20 MHz primary transmitter modulators, which create the composite audio signal for those transmitters. The controller sends the 1 MHz signal from rack C to the standby transmitter modulator.

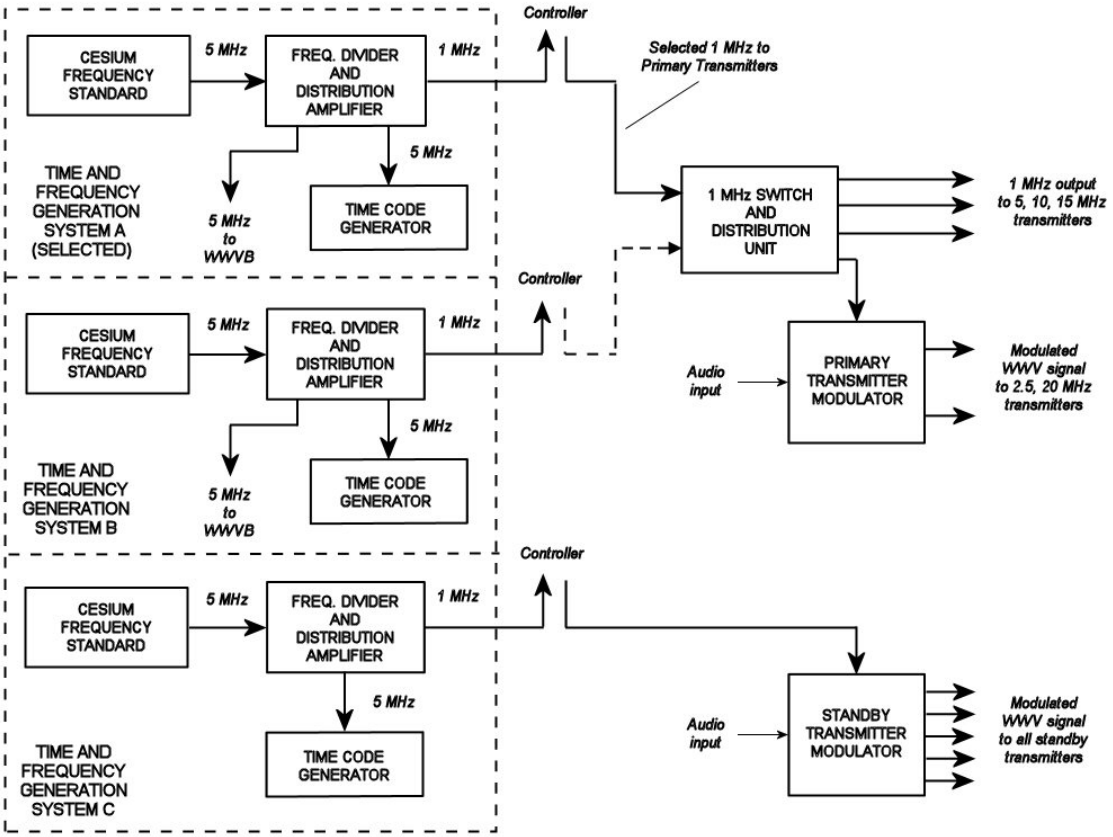

Figure 2.4. WWV standard carrier frequency generation system.

b) Voice Time Announcements

The most popular element of the WWV broadcast is undoubtedly the voice time of day announcements, broadcast once each minute. The WWV voice time announcement is made using a male voice, and begins about 7 seconds before the beginning of the minute. An example of the voice time announcement for 0725 UTC would read:

> *"At the tone: seven hours, twenty five minutes, coordinated universal time."*

This announcement is followed by a short 1000 Hz tone. The time announcement is concatenated, or assembled from a variety of digitally stored phrases or enunciated words. All the phrases and words are recordings of a human voice.

A station identification message using the same male voice is broadcast at the beginning and mid-point of each hour. The station ID reads as follows:

> *"National Institute of Standards and Technology time: this is Radio Station WWV, Fort Collins Colorado, broadcasting on internationally allocated standard carrier frequencies of two-point-five, five, ten, fifteen, and twenty megahertz, providing time of day, standard time interval, and other related information. Inquiries regarding these transmissions may be directed to the National Institute of Standards and Technology, Radio Station WWV, 2000 East County Road 58, Fort Collins, Colorado, 80524."*

The WWV station ID announcement lasts about 35 seconds, and is broadcast during the minute following the tone that marks the beginning or midpoint of each hour. For example, the announcement runs at 1100 UTC and 1130 UTC. It is stored in its entirety in electronic memory in the time code generator.

c) Standard Time Intervals

Standard time intervals broadcast on WWV are indicated by various tones of various lengths. Intervals of seconds, ten seconds, minutes, hours, and days are all part of the broadcast. The time intervals are indicated as follows:

- Seconds: bursts of 1000 Hz tone; most are 5 ms long, which simulates the ticking of a clock. These pulses or "ticks" are omitted on the 29th and 59th seconds. The second that begins each minute is indicated by a longer tone.

- Ten seconds: indicated on BCD time code.

- Minutes: 800 ms burst of 1000 Hz tone at the beginning of every minute except the beginning of the hour.

- Hours: 800 ms burst of 1500 Hz tone at the beginning of every hour. Also, the 440 Hz tone is broadcast once each hour, at minute 2 on WWV and minute 1 on WWVH, except for the first hour of each day.

- Days: There is no formal day marker, but the 440 Hz tone described above is omitted during the first hour of each day.

d) Standard Audio Frequencies

In addition to the inaudible standard carrier frequencies, WWV also broadcasts standard audio frequencies during most minutes of every hour. Figure 2.5 is an illustration of the WWV audio signals. Tones of 500 Hz and 600 Hz are broadcast on alternating minutes, and a 440 Hz tone is broadcast once each hour, except the first hour of the day. The tones are inserted in the broadcast for the first 45 seconds of their allocated minutes, and are followed by a silent period and the voice announcement indicating the time (Figure 2.5 inset). The seconds pulses interrupt the tones briefly; each pulse is preceded by 10 ms of silence and followed by 25 ms of silence. The entire "protected zone" around each pulse is shown in Figure 2.6. This arrangement makes the pulse easier to discern; however, the short silent periods around each pulse are nearly unnoticeable.

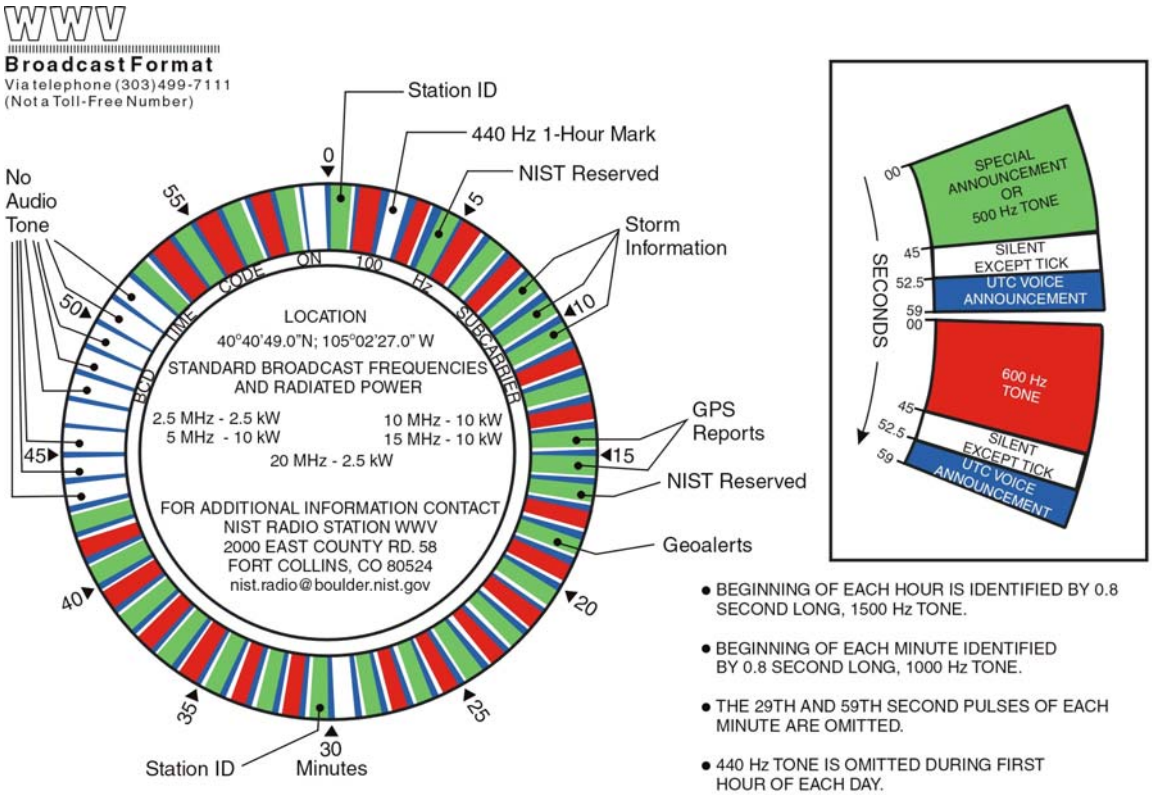

Figure 2.5. WWV audio broadcast format.

Longer silent periods without tone modulation are included in several minutes of every hour of the WWV broadcast format. However, the carrier frequency, seconds pulses, time announcements, and the BCD time code continue during these periods. The purpose of the silent periods on WWV is to prevent interference with voice announcements on the WWVH broadcast. One station will normally not broadcast a tone while the other is broadcasting a

voice message. As shown in Figure 2.5, the silent periods for WWV are from 43 to 52 minutes after the hour, as well as minutes 29 and 59.

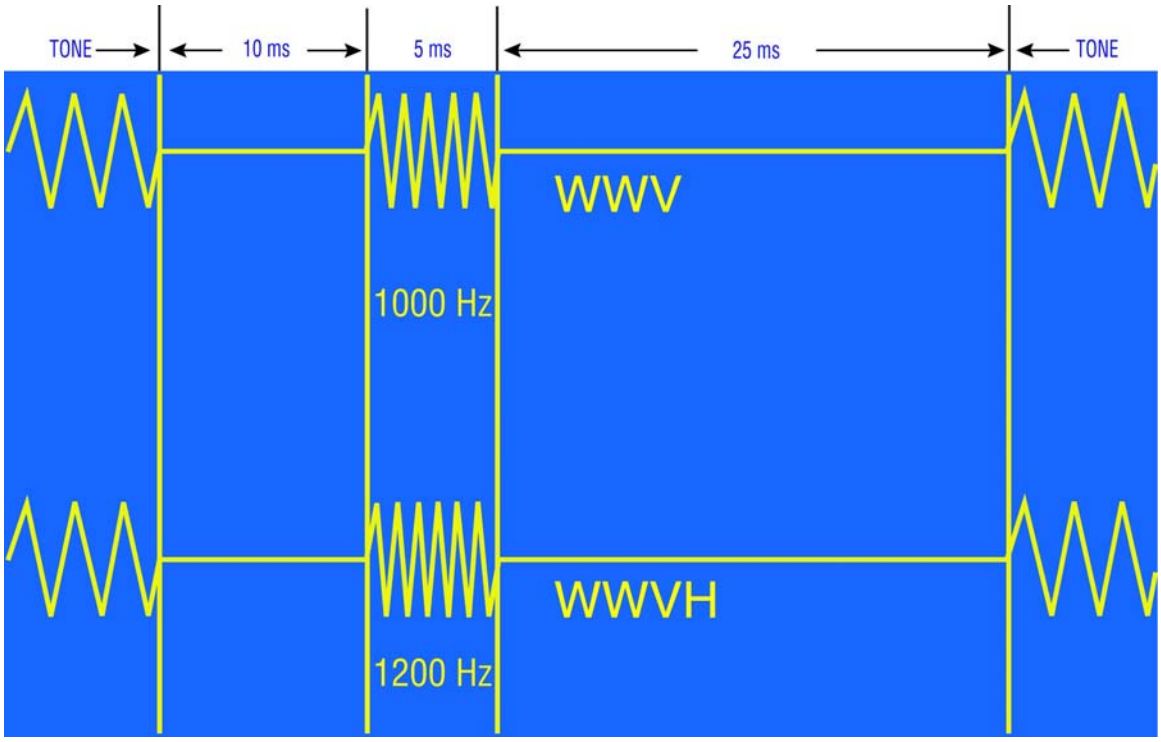

Figure 2.6. WWV and WWVH second pulses.

e) UT1 Corrections

UT1 information is broadcast on WWV during the first 16 seconds of every minute using doubled seconds pulses, or doubled ticks. The amount of correction (in tenths of a second) can be determined by counting the number of doubled ticks. If the ticks occur during the first eight seconds (1 to 8) of the minute, the sign of the correction is positive; if they occur during the second eight seconds (9 to 16), it is negative. UT1 corrections are also broadcast as part of the BCD time code (next section).

f) 100 Hz Time Code

WWV and WWVH broadcast an identical time code on a 100 Hz subcarrier. In addition, the 100 Hz frequency is usable as a standard frequency. It is audible as an intermittent low buzzing sound on most receivers and on the telephone time-of-day service. It originates in the time code generators, and is the only portion of the broadcasts that identify the day of year, and the last two digits of the year.

The time code is in binary coded decimal (BCD) format, where four bits represent one decimal number. The binary-to-decimal weighting scheme is 1-2-4-8, with the least significant bit sent first. The binary groups and decimal equivalents are shown in Table 2.1.

Table 2.1. BCD weighting scheme used by WWV and WWVH time code.

Decimal number	Bit 1 2^0	Bit 2 2^1	Bit 3 2^2	Bit 4 2^3
0	0	0	0	0
1	1	0	0	0
2	0	1	0	0
3	1	1	0	0
4	0	0	1	0
5	1	0	1	0
6	0	1	1	0
7	1	1	1	0
8	0	0	0	1
9	1	0	0	1

The WWV/VH time code is a modified IRIG-H code. IRIG stands for the Inter-Range Instrumentation Group, a consortium of technical personnel representing the different military services, who are responsible for standardizing communications methods at various missile range facilities. In the standard IRIG-H format, the bits are transmitted at a rate of 1 pps on a 100 Hz or 1000 Hz carrier, using amplitude modulation. A binary 0 would be seen as a pulse consisting of increased or "high" modulation of 200 ms duration (20 cycles of a 100 Hz tone) and a binary 1 would see a pulse of 500 ms duration (50 cycles of a 100 Hz tone). Position marker bits are 800 ms duration. The leading positive-going edge of each pulse occurs at the beginning of each second. The ratio of high to low amplitude is 3.3:1 [39].

In the WWV/VH broadcasts, the 100 Hz tone (along with all other tones, see Figure 2.6) is suppressed to allow the seconds ticks to be heard. This has the effect of deleting the first 30 ms of a normal IRIG-H pulse. Thus, on the WWV/VH time code a binary 0 is 170 ms long, a binary 1 is 470 ms long, and a position marker is 770 ms duration. The leading edge of each pulse occurs 30 ms after the beginning of that second.

Each WWV/VH time code frame takes one minute to send. The frame contains the last two digits of the current year, day of year, hour and minute, as well as UT1 corrections, Daylight Saving Time and standard time information, leap second indication, and various identifier and position marker bits. The year (00 through 99), hour (00 through 23) and minute (00 through 59) are each expressed using two BCD groups or sets. The day of year (001 through 366)

requires three BCD sets. Seconds can be determined by counting the pulses within the frame. All information in the time code frame is referenced to UTC at the beginning of the frame.

Figure 2.7 shows the WWV and WWVH time code format. Unlike the standard IRIG-H code, no pulse is transmitted during the first second of the minute. This blank space, or "hole," when combined with position marker P_0, constitutes the frame reference marker R, which marks the beginning of a new minute. Since the first 30 ms of each pulse is deleted, the first pulse of the new frame occurs 1.03 s after the beginning of the minute. Position marker bits lasting 770 ms (P_0 to P_9) are inserted every 10 s for synchronization purposes. These position markers also indicate the tens of seconds standard time interval.

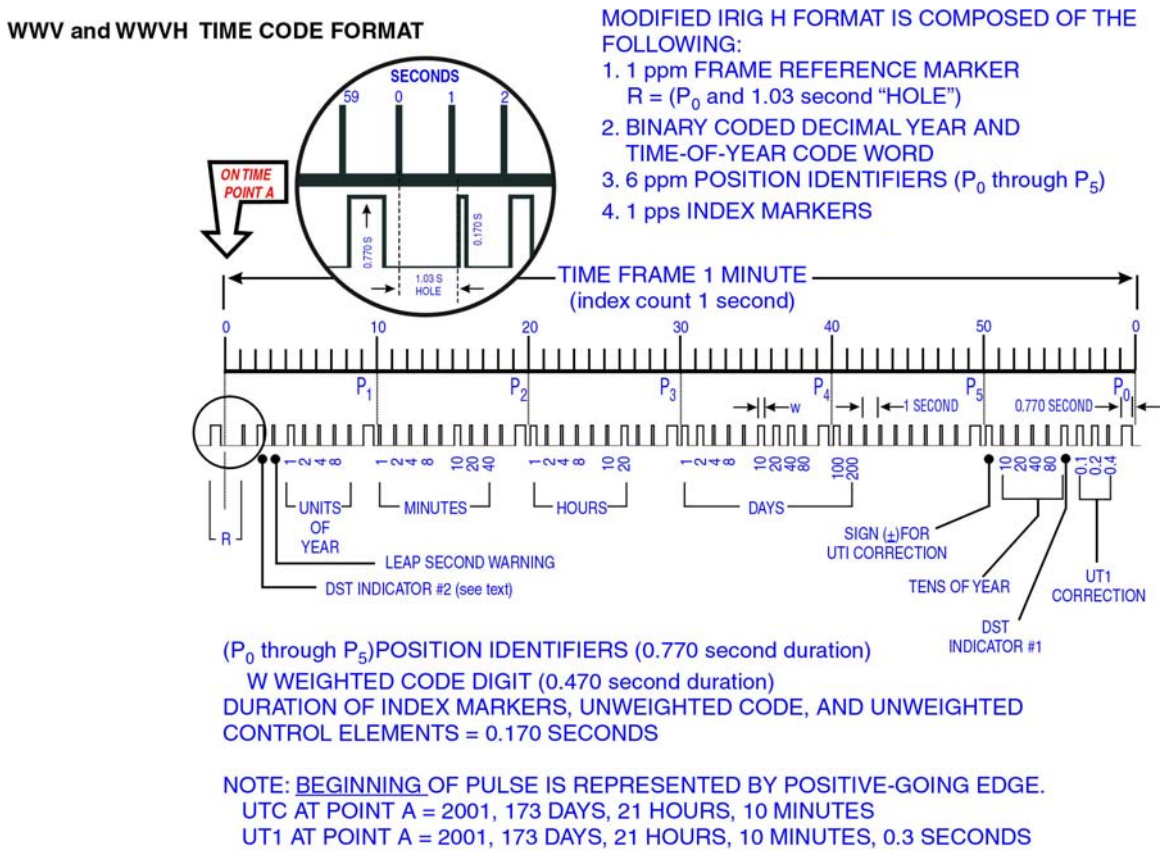

Figure 2.7. WWV and WWVH time code diagram.

WWV and WWVH broadcasts the last two digits of the current year in two separate sections of the time code. Bits 51 through 54 are used to transmit the decade indicator, and bits 4 through 7 are used to transmit the last digit. Therefore, the year 2004 would be indicated by a binary equivalent of decimal 04: binary 0000 on bits 51-54 (decimal 0) and binary 0010 (decimal 4)

on bits 4-7. Likewise, the hours are transmitted on bits 20-23 and 25, 26, and the minutes on bits 10-13 and 15-17. Since the day of year function involves three decimal digits, three BCD sets are required: bits 30-33, 35-38, and 40, 41.

UT1 corrections are transmitted on three bits: 56, 57, and 58. This BCD set indicates the amount of correction when multiplied by 0.1. The sign of the correction is found in bit 50; if that bit is high, or set at 1, the correction is added to UTC to find UT1. If bit 50 is low, the correction is subtracted. Since only three bits are used, the UT1 correction range broadcast by WWV/VH is from –0.7 to +0.7 s.

A leap second warning is indicated on the WWV/VH time code at bit 3. If a one is present on bit three, a leap second will be added to UTC at the end of the current month (leap seconds are added only at the end of June or December). The warning bit is set high near the beginning of the month, and immediately after the leap second is added, it is set low, or to zero again.

The WWV/VH time code carries Daylight Saving Time (DST) and standard time (ST) indicators on bits 2 and 55. During standard time, both bits are set low (0). At 0000 UTC on the day ST changes to DST, bit 55 goes high, and bit 2 goes high at 0000 UTC the following day. When DST ends, bit 55 is set low at 0000 UTC the day of the change, and bit 2 goes low 24 hours later.

All unused bits are set to 0 and reserved for future use.

g) Official Announcements

Several minutes of every hour on WWV are allocated for official announcements by U.S. Government agencies. The announcements are of a public service nature and are limited to 45 seconds per segment. More than one segment may be used by a particular agency. Announcement allocations as of this writing can be seen in Figure 2.5 and are described in Table 2.2. For more information about the content and the format of these announcements, see *NIST Special Publication 432* [38], or contact the sponsoring agency.

In addition to the announcements listed in Table 2.2, NIST reserves minutes 4 and 16 for occasional special announcements. These segments are used to relate information of interest to users of the time and frequency broadcasts, such as user surveys or changes to the broadcast. When no announcement is present, a tone is usually broadcast.

The WWV voice storage systems consists of two commercially available voice storage units, manufactured by Racom Corp., and associated filtering and monitoring equipment. Users dial into the voice storage units and leave the messages to be broadcast on an allocated channel in that device. At the appropriate time, the time code generators play that message as part of the composite audio signal sent to the transmitters. All three TCGs receive the audio channel, even though only one is “on the air.” A majority logic device prevents erroneous channel triggering.

Table 2.2. WWV official announcements.

Minute	Message	Sponsor	Web site
8, 9	North Atlantic High Seas Storm Warnings	National Weather Service	www.nws.noaa.gov
10	Eastern North Pacific High Seas Storm Warnings	National Weather Service	www.nws.noaa.gov
11	Eastern North Pacific Storm Warnings (when necessary)	National Weather Service	www.nws.noaa.gov
14,15	GPS satellite status	U.S. Coast Guard Navigation Center	www.navcen.uscg.gov /gps/
18	Geophysical Alert	NOAA Space Environment Center	www.sec.noaa.gov

h) Modulation Levels and Spectrum Allocation

The signals from WWV and WWVH are broadcast using the double-sideband, full-carrier mode of emission, which is the same mode as typical analog commercial AM broadcasts. The steady audio tones and the BCD time code are at a 50 % modulation level; the voice announcements are 75 % modulated, and the seconds pulses and minute and hour markers are 100 % modulated.

Since the WWV and WWVH broadcasts include a number of audio tones and announcements, the amount of the frequency spectrum needed for the broadcast is greater than just the carrier frequency. For example, the 1500 Hz hourly tone broadcast by both stations requires 3 kHz bandwidth (±1500 Hz on both sides of the carrier). The Office of Spectrum Management of the National Telecommunications and Information Agency (NTIA) has issued NIST radio stations several allocations of the frequency spectrum in which to operate time and frequency broadcasts. The allocations that are currently used by NIST are shown in Table 2.3. The bandwidth used by the NIST broadcasts does not exceed these allocations.

Table 2.3. NIST radio station spectrum allocations.

Carrier frequency (kHz)	Station			Spectrum allocation (kHz)
	WWV	WWVH	WWVB	
60			X	59 - 61
2,500	X	X		2,495 - 2,505
5,000	X	X		4,995 - 5,005
10,000	X	X		9,995 - 10,005
15,000	X	X		14,990 - 15,010
20,000	X			19,990 - 20,010

i) WWV Signal Monitoring

The WWV signal is compared and monitored for accuracy at several points using several methods, including comparator and controller systems, manual timing comparisons, and the NIST Frequency Measurement and Analysis Service (FMAS) [37]. A simplified block diagram of the WWV signal monitoring system was shown earlier in Figure 2.2.

The WWV signal is monitored for accuracy as it is being generated. This monitoring equipment is located in the WWV main screen room. The outputs of each frequency standard and time code generator are monitored by the Time Code and Frequency Comparator. This unit continuously compares the WWV time code, in DC level shift (DCLS) form, from each time code generator. In addition, a frequency sample derived from the 5 MHz reference signal is sent from each TCG to the frequency input of the comparator. In this way, the frequency stability of each cesium standard is monitored. The comparator compares each of the three units with the other two and conducts a "majority vote" to determine suitability of the signal. If one unit is found to be different from the other two units, either in time code or frequency, a signal is sent to the screen room controller, which disconnects the 1 MHz output from that rack and places another rack online within 5 µs. The audio output of the defective TCG is also switched (Figure 2.3).

The screen room controller also contains a time code comparator, which accepts the DCLS time code from each TCG. This function runs in parallel with the Time Code and Frequency Comparator unit, and serves to verify its operation. When the controller unit disconnects the 1 MHz signal from a defective rack, an alarm is sent to the security company that monitors the stations. The security company then contacts station personnel and notifies them of the problem.

The accuracy of the WWV signal is also monitored by manual comparisons. Using the GPS common-view technique, the outputs of each time and frequency generation systems at WWV and WWVB are compared against UTC(NIST) in Boulder every working day.

Each TCG outputs a 1 pps signal that is derived from the 5 MHz input from its associated cesium frequency standard. This signal is routed to a time interval counter where a manual time comparison between systems is made every working day. The 5 MHz signal from each cesium oscillator is also fed to a 5 MHz to 1 pps divider, whose output is also routed to the time interval counter, where it is checked daily. The 1 pps signal from the site master clock system is used as the station reference 1 pps. This signal is used to compare against the standby systems and WWVB. Corrections to the frequency standards and time code generators are entered manually when required.

The FMAS is a third method of monitoring the WWV frequency accuracy. This system compares the outputs of each frequency standard with a GPS frequency; using a hybrid form of the common view technique, simultaneous comparisons are made at the FMAS server in Boulder. Data from the station FMAS system is downloaded to Boulder periodically and analyzed [37].

The WWV time code is recorded as it is being generated. A decoding circuit and data logging computer program are connected to the designated site master clock. This arrangement allows each bit of the time code to be stored as it is being broadcast. The data are archived periodically and stored at the station.

3. Frequencies and Power Levels

WWV broadcasts continuously on 2.5 MHz, 5 MHz, 10 MHz, 15 MHz, and 20 MHz. Normal radiated power is 10 kW on 5, 10, and 15 MHz, and 2.5 kW on 2.5 and 20 MHz. Radiated power during periods of standby operation, which occur during repairs or maintenance on the primary transmitter or antenna, is 2.5 kW on all frequencies. Table 1.1 (page 17) shows the transmitter designations and configurations.

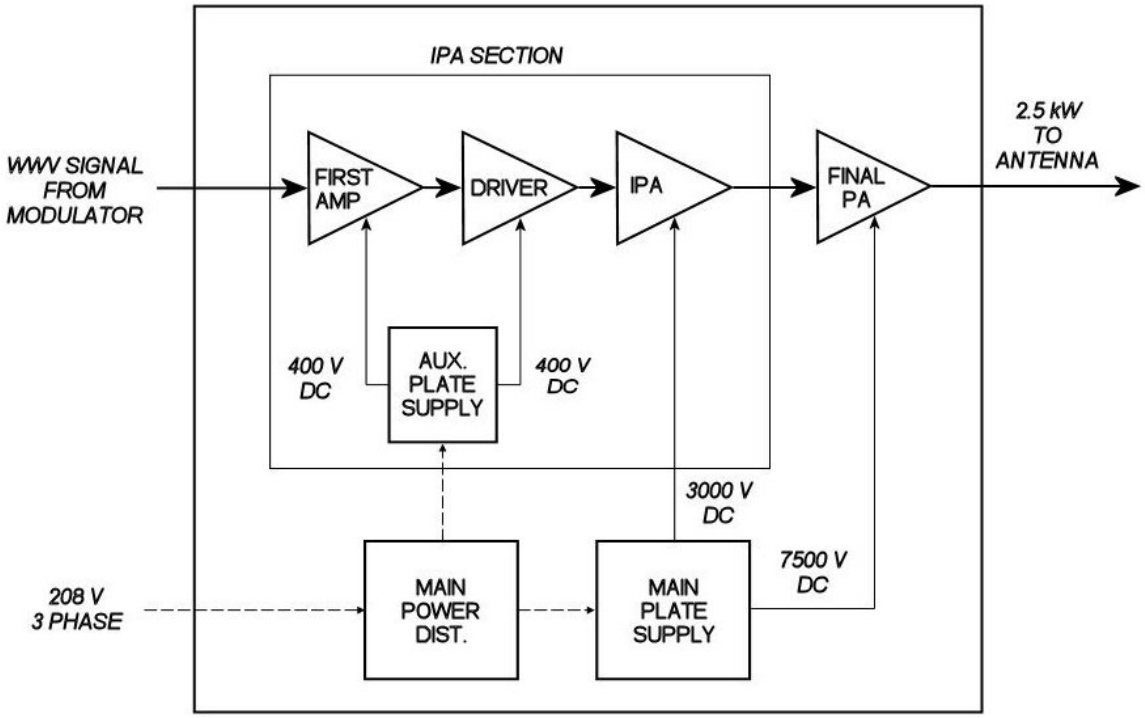

Figure 2.8. Block diagram of a TMC transmitter.

The Technical Materiel Corporation (TMC) manufactured the eight original transmitters for WWV when the station was moved to Fort Collins in 1966. The TMC transmitters were of two types: the GPT-10K, used for the lower powered broadcasts at 2.5 kW output power, and the GPT-40K, with 10 kW output used for the 5, 10, and 15 MHz higher powered broadcasts. New transmitters (discussed below) for these frequencies were installed in 1990, and the GPT-40K transmitters were then modified such that they are operationally identical to the GPT-10K.

All of the standby transmitters at WWV are TMC units, as well as the primary transmitters on 2.5 MHz and 20 MHz. The WWV signal for these transmitters, which originates in the time code generators, is modulated with the carrier frequency in a separate modulator assembly located in the WWV screen room. The modulated signal is then fed to the individual TMC transmitters (Figure 2.4).

A simplified block diagram of a TMC transmitter is shown in Figure 2.8. They are class AB_1 linear radio frequency (RF) amplifiers employing vacuum tubes at each stage of amplification. Four stages are used, bringing the low-level signal from the modulator up to 2.5 kW average power. The first three amplifier tubes, the first amp, driver, and intermediate power amplifier (IPA), are contained in the IPA subassembly within the transmitter, while the final power amplifier tube (PA) is mounted on a separate shelf. Two blowers are installed in the transmitter to provide cooling for the tubes. The TMC transmitters are about 32 % efficient.

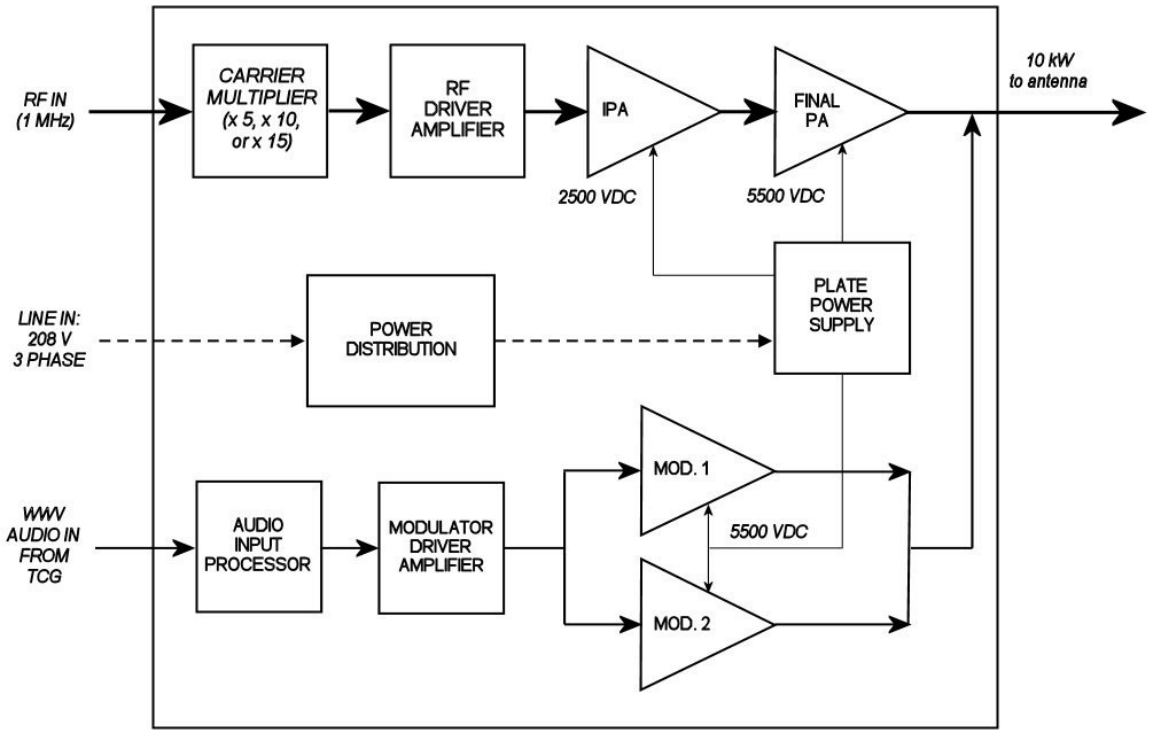

Figure 2.9. Block diagram of a CCA transmitter.

The 5 MHz, 10 MHz and 15 MHz broadcasts are carried by transmitters manufactured by CCA corporation and installed in 1990. These transmitters differ in design from the TMC units in that the WWV signal is modulated at the transmitter, rather than an external modulator; also, the CCA transmitters' final amplifier stages operate Class C, which is more efficient than the

class AB_1 mode of the TMC transmitters. The CCA transmitters provide 10 kW output power, and are about 54 % efficient.

A simplified block diagram of a CCA transmitter is shown in Figure 2.9. The carrier frequency is amplified separately from the audio portion of the WWV signal. A 1 MHz signal originating from the site master clock is sent to each transmitter, where it is multiplied by 5, 10, or 15 to match the carrier frequency of that broadcast. It is then sent to the solid state RF driver amplifier, then to the intermediate power amplifier (IPA) and the final power amplifier (PA) tubes. Meanwhile, the audio portion of the signal from the online time code generator is sent through the first two stages of amplification, the solid state audio input processor and modulator driver amplifier, then to the modulator tubes, which are operated in push-pull configuration, Class AB1. The greatly amplified audio output of the modulator tubes is applied to the output of the final PA tube of the RF section, where it modulates the amplified carrier frequency.

Each broadcast frequency has a standby transmitter. In case of a primary transmitter failure, automated sensing and control circuitry brings the standby transmitter online within two minutes.

4. WWV Antennas

The WWV antennas are described in Chapter 1.B.1.d., and listed in Table 1.2 (page 20). All WWV antennas have an omnidirectional radiation pattern in the horizontal plane. The theoretical radiation pattern of an ideal vertical half-wave dipole antenna is shown in Figure 2.10 [40]. After the Fort Collins WWV facility was built, a study was done to analyze the actual radiation pattern of the 15 MHz WWV antenna. The results are shown in Figure 2.11 [34]

The wavelength of the WWV carrier frequencies allows the use of antennas that approach the ideal characteristics for these broadcasts. The WWV antennas are assumed to be nearly 100 % efficient. The voltage standing wave ratio (VSWR) for the antennas as indicated at the transmitters is about 1.12:1.

The two Collins broadband antennas described in Chapter 1 are capable of operating at any frequency from 2.5 MHz to 25 MHz without adjustment. They are base-fed, vertically polarized omnidirectional monopole antennas. At the lower end of its operating range, the antenna functions as a “fat monopole,” in which the entire array radiates the signal. At higher frequencies, only the lower inverted cone radiates, which simulates an inverted discone antenna. The VSWR across the frequency range is nominally less than 2.5:1 [41]. No tuning stubs are used in the broadband antenna installation.

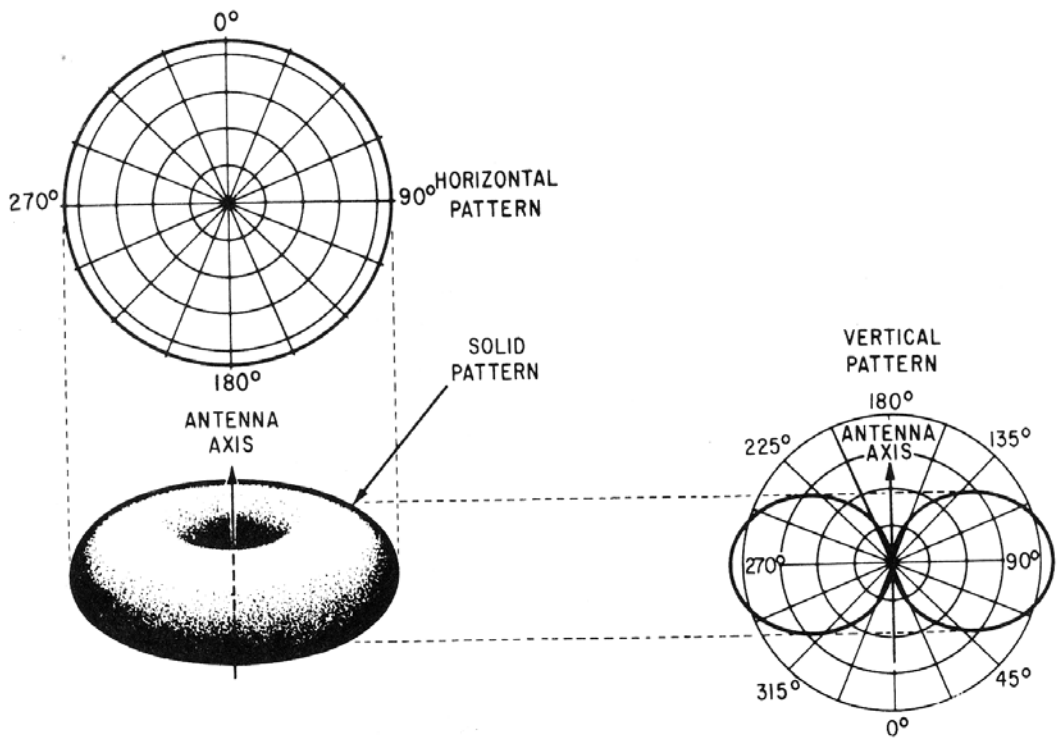

Figure 2.10. Theoretical radiation pattern of ideal vertical half-wave dipole antenna.

5. WWV and WWVB Broadcast Monitoring and Alarm Systems

Since the stations are staffed only during normal weekday working hours, automated systems are installed to monitor the timing, broadcast, and other equipment. Several independent alarm and monitoring systems are in use at WWV and WWVB.

The WWV transmitters are monitored by a microprocessor circuit built by a staff technician. This standby transmitter control system accepts a rectified RF sample of the signal from each primary transmitter's output circuit. When the signal drops out, as it does when that transmitter shuts down due to a failure, the control system brings up the standby transmitter for that frequency, switching the antenna connections if necessary. The system will bring up a standby transmitter within two minutes (Figure 2.12).

The status of the WWV and WWVB broadcasts is also recorded by software that accepts the same rectified RF sample from each primary transmitter, and displays its level relative to zero on a graphical user interface. The program indicates the status of each primary transmitter (on-line or off) and when the last transition took place. These data are logged in a text file and archived periodically; archived data can be retrieved and displayed on the user interface. The phase of the WWVB signal, including the 45° phase shifts, is also displayed and logged. WWVB is also monitored at WWVH using a phase-tracking receiver connected to a strip chart recorder that monitors and logs the amplitude and phase of the signal.

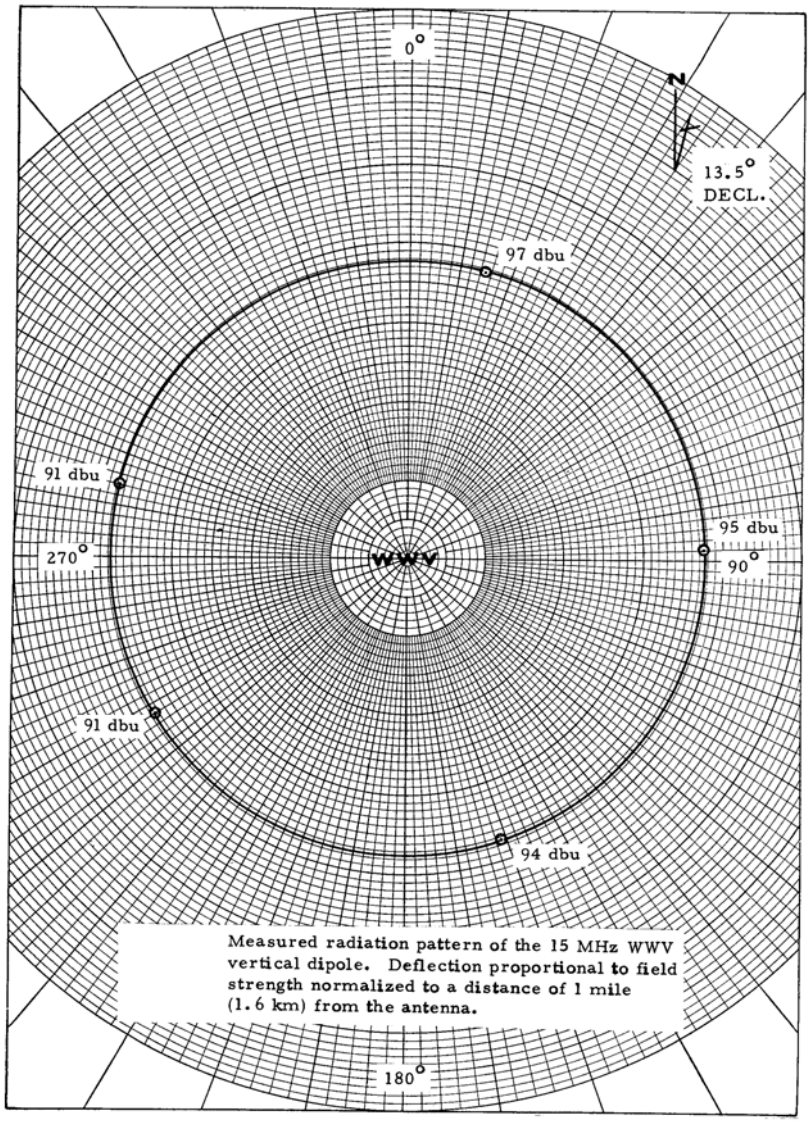

Figure 2.11. Measured radiation pattern of the WWV 15 MHz vertical dipole.

The status of the telephone and data connections to the NIST Boulder labs is monitored by a line monitoring device that detects an outage or discontinuity of the service. When an outage occurs, the device pages staff members using a separate local telephone line.

A commercial security monitoring company has also been contracted to monitor the status of WWV and WWVB. The company continuously monitors the status of the broadcasts as well as fire and burglar alarms, and the health of the alarm system. When a broadcast alarm is received, a company employee first telephones the station to notify any station personnel who are there of the problem. If no one is contacted at the stations (as would be the case during non-duty hours), the employee then dials the home telephone number and pager number of each staff member in a pre-determined order until someone is contacted. That station staff member acknowledges receipt of the call or page and verifies an individual security code assigned to his or her name.

When a broadcast outage occurs, an alarm known as the Valega system (named for the former staff technician who built it) is triggered. The Valega system is a set of simple HF receivers tuned to the different frequencies of the WWV broadcast. The receivers, located at the WWVB building, are connected to a long-wire antenna mounted on the roof. The Valega is a true “off the air” monitor, in that when one or more of the receivers senses a loss in signal level, a set of

alarm contacts is made and the alarm sequence started. The sequence includes an approximate 120 s delay to allow for transmitter overload recycling or standby transmitter activation. If the signal has not been restored after the delay the alarm signal is sent to the WWV screen room controller, which is connected to a control panel installed by the security company. From the panel a code is sent via telephone to the security company office, where personnel then start telephoning the staff named on the call-out list.

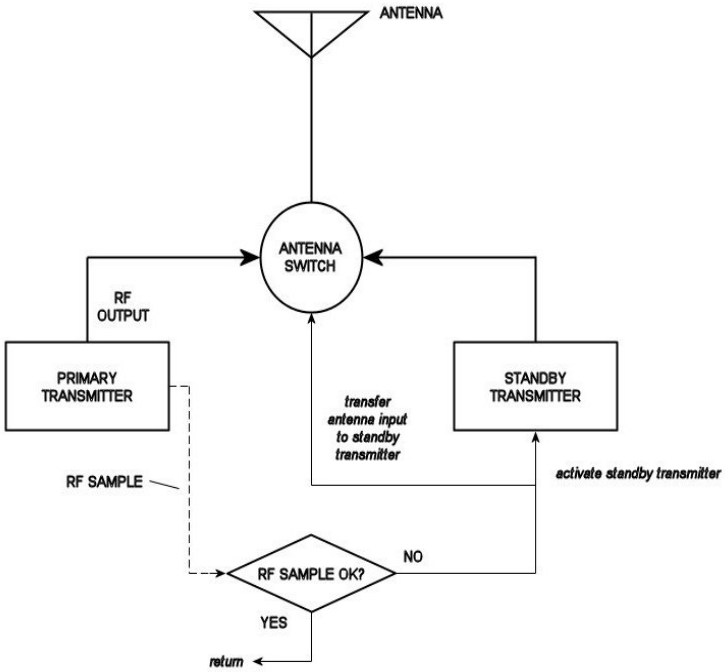

Figure 2.12. WWV transmitter monitoring system.

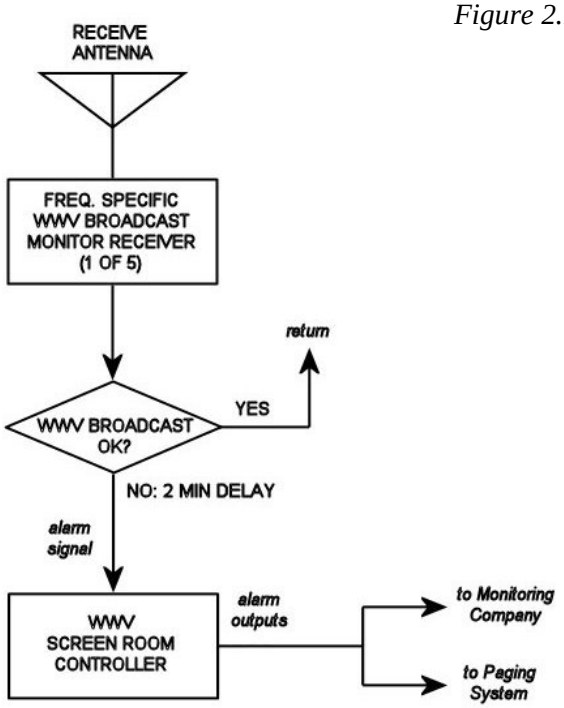

Figure 2.13. WWV monitoring and alarm system.

The screen room controller is also connected to a paging system built by a staff technician. Every staff member carries a pager during duty hours and non-duty hours. The paging system operates in parallel with the security company system. This circuit, which utilizes a microprocessor, receives the outage signal from the controller and starts a dialing routine. After a delay, the paging system then starts dialing staff pager numbers in a pre-determined order, pausing 4 min between calls. The paging circuit sends an assigned code for the different alarms; for example, a WWV broadcast alarm page would consist of 10 ones, a WWVB alarm 10 twos, and so forth. Each staff member is paged twice before the next member is paged. During non-duty hours, the first staff member paged who is able to respond to the alarm dials a telephone number

connected to the paging system, which stops further pages. The staff member then calls a voice mail box at the station and leaves a message indicating that he is responding. This allows other staff members who may receive a page or a call from the security company to check for earlier responders before coming in. An audible alarm also sounds at the WWVB building when the dialing circuit is enabled. Figure 2.13 shows a simplified block diagram of the monitoring and alarm system.

6. Commercial Electrical Power Monitoring

The commercial power coming into the WWVB building is monitored by a power monitoring system made by Dranetz/BMI Inc. This system constantly monitors the incoming 480 V three-phase power for level, quality, and phase. At present, no alarms are connected to the system, but data are logged and are accessible after an event occurs. Data are fed to a computer located at the WWVB transmitter control console, where they can be examined on-screen. A printer is available for printing plots of the voltage quality.

Since the Dranetz system monitors the power from the same commercial feeder that supplies both buildings, an event logged at WWVB will affect the WWV building also. No power monitoring exists at the WWV building, other than the UPS monitor described in the next section.

7. UPS Monitors

UPS units located in the WWV and WWVB buildings are equipped with computerized event and alarm logs that document any disturbance in the power to the UPS great enough to cause the loads to transfer. Although they offer few details of the event, they do put a time stamp on the disturbance, which can be traced using the Dranetz system described earlier.

C. Technical Description of WWVB

The WWVB signal is derived from the site master clock, located in the WWV screen room. A 5 MHz sine wave output from the selected rack is sent via buried cables to the WWVB screen room, a distance of about 396 m. The station reference 1 PPS signal is also sent. For comparison purposes, a second 5 MHz signal is sent from a different rack. At the WWVB screen room, the 5 MHz signals are connected to the four WWVB time code generators. Two of the TCGs are fed from the site master clock, and the other two are fed from one of the other cesium oscillators. The TCGs divide the 5 MHz input down to the 60 kHz carrier frequency, and modulate it with the WWVB time code. This is the signal which is sent to the transmitters; no further modulation is necessary.

The WWVB screen room is equipped with its own controller and time code comparator, which monitor and control the outputs of the TCGs for accuracy using a microprocessor and solid state relay and switching circuits. The WWVB controller and comparator accept inputs from each TCG, and use majority vote logic to determine the health of the units. If the inputs from one TCG are defective, the controller places that unit off-line, and ignores its inputs. If another TCG fails, the controller shuts down all outputs to the transmitters and sends an alarm.

Each of the TCGs provides a 1 PPS output, which is manually compared against the station reference 1 PPS every working day using a time interval counter in the WWVB screen room.

The WWVB broadcast format consists of the 60 kHz standard carrier frequency and a binary coded decimal (BCD) time code.

1. Standard Carrier Frequency and Phase Signature

The 60 kHz standard frequency is developed in the WWVB time code generator, and derived from the site master clock. The TCG also advances the phase of the carrier by 45° between 10 and 15 minutes past each hour, to serve as station identification. When plotted, an hourly phase shift of 2.1 µs becomes apparent, as shown in Figure 2.14. The time code, which is unique to WWVB, also identifies the station.

2. Time Code and Time Code Generators

The WWVB time code originates in the time code generators. It provides time of day, standard time intervals, and other time information. No audible information is contained on the WWVB broadcast.

The WWVB time code relates UTC minute, hour, day of year, the last two digits of the current year, as well as UT1 correction, Daylight Saving Time information, and leap second bits. Standard time intervals of seconds, tens of seconds, and minutes are also transmitted. Although the WWVB time code bears some resemblance to the WWV/VH time code, there are significant differences. In the WWVB time code, the *downward* or negative-going edge of each pulse indicates the beginning of each second. This negative-going edge is sometimes called the on-time marker, or OTM. Also, although both codes are BCD codes, the WWVB code weighting scheme is 8-4-2-1; the *most* significant digit is sent first. The weighting

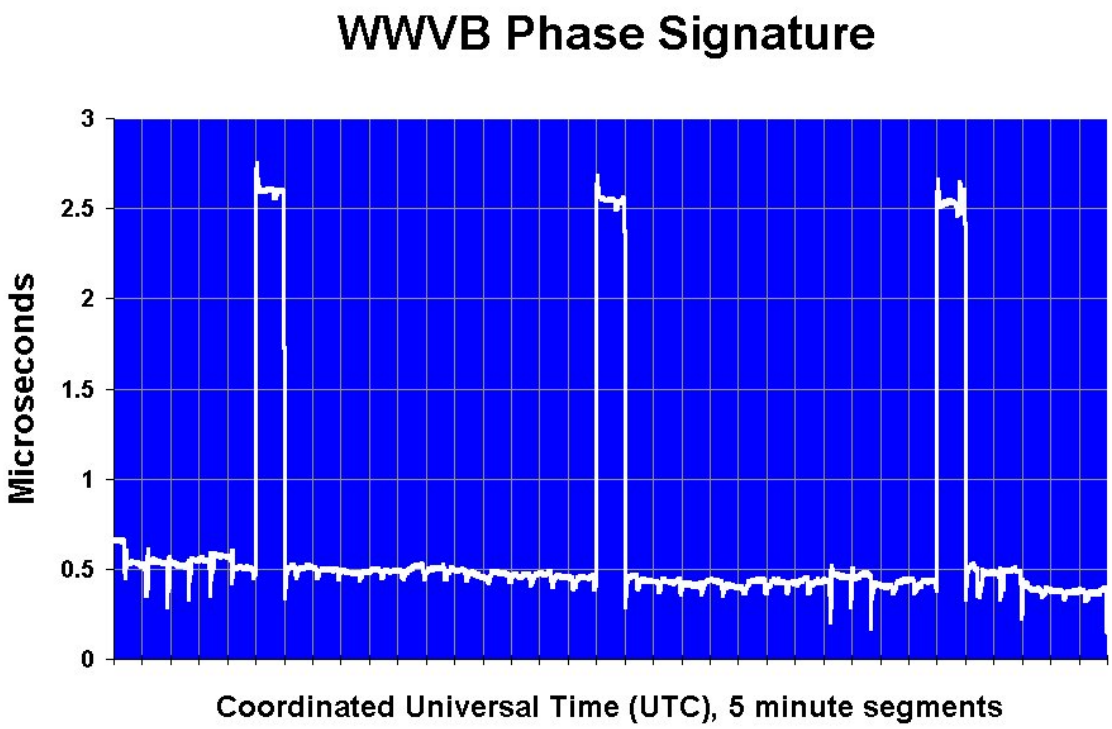

Figure 2.14. WWVB phase signature.

scheme is shown in Table 2.4. Unlike the WWV/VH time code, the WWVB time code includes leap year information.

The BCD time code is sent at the rate of one bit per second, using pulse width modulation. In this mode, the output power of the transmitters is lowered 10 dB at the beginning of each second. The duration of the period of reduced power indicates whether a binary 0, 1, or position marker is being sent. Full power is restored 200 ms later for a binary zero, 500 ms after the beginning of the second for a binary one, and 800 ms after the start of the second for a position marker.

A graphical representation of the WWVB time code is shown in Figure 2.15. Each time code frame takes one minute to send. The beginning of each minute is indicated by a frame reference marker consisting of two adjacent 800 ms position markers at seconds 59 and 0, and minutes are expressed in bits 1-3 and 5-8. Hours are transmitted on bits 12, 13, and 15-18. Since the day of year indicator uses three decimal digits, three sets of bits are required: 22 and 23, 25-28, and 30-33. The last two digits of the current year are broadcast on bits 45-48 and bits 50-53. Position markers are transmitted every 10 s (on the seconds ending with 9).

Table 2.4. BCD weighting scheme used by WWVB time code.

Decimal number	Bit 1 2^3	Bit 2 2^2	Bit 3 2^1	Bit 4 2^0
0	0	0	0	0
1	0	0	0	1
2	0	0	1	0
3	0	0	1	1
4	0	1	0	0
5	0	1	0	1
6	0	1	1	0
7	0	1	1	1
8	1	0	0	0
9	1	0	0	1

UT1 correction information is broadcast on two sets of bits. Bits 36 through 38 indicate whether the correction will be positive or negative with respect to UTC. If ones are transmitted on bits 36 and 38, the sign is positive; if a one is present on bit 37, the sign is negative. The amount of correction (in tenths of a second) is transmitted on bits 40 through 43. Since four bits are used, WWVB is capable of broadcasting a UT1 correction range from –0.9 to +0.9s.

Leap second warning bits are indicated on the WWVB time code on bit 56. If a one is present on bit 56, this indicates that a leap second will be added to UTC at the end of the current month (leap seconds are inserted only at the end of June or December). Bit 56 is set to one near the beginning of the month, and is set back to zero immediately after the leap second occurs.

Leap years are indicated on bit 55. If the current year is a leap year, a one is sent on bit 55, usually sometime in January but before February 29. This function adds an additional day to the day-of-year counter, such that the last day of that year will be day 366. On January 1 of the following year, bit 55 is set back to zero.

The WWVB time code carries Daylight Saving Time (DST) and standard time (ST) indicators on bits 57 and 58. During standard time, both bits are set to zero. At 0000 UTC on the day ST changes to DST, bit 57 is set to a one, and bit 58 is set to a one at 0000 UTC the following day. When DST ends, bit 57 is set to zero at 0000 UTC the day of the change, and bit 58 goes low 24 hours later.

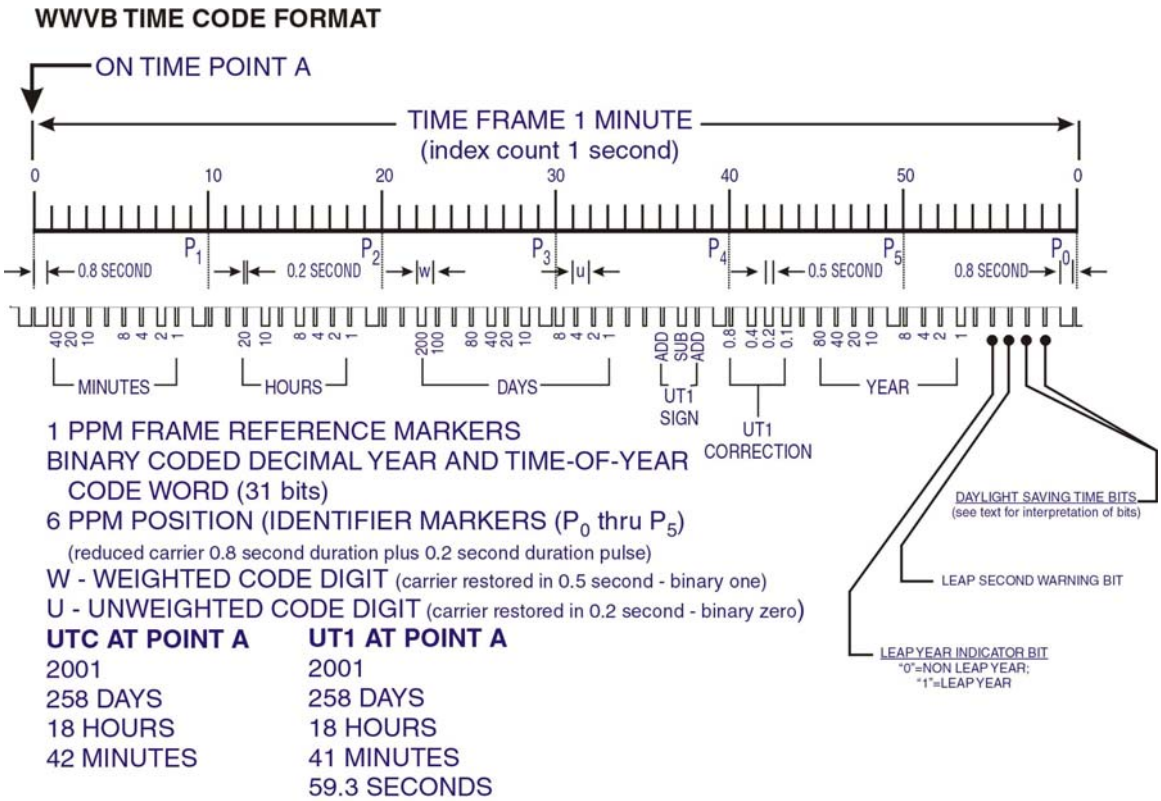

Figure 2.15. WWVB time code format.

Standard time intervals are also broadcast on WWVB. The frame reference marker described above indicates the beginning of a minute; tens of seconds are indicated by the position markers. Individual seconds are indicated by counting the pulses.

3. Frequency and Power Level

WWVB broadcasts continuously at 60 kHz. Normal radiated power is 50 kW, with the antennas operated in the normal dual antenna configuration. When in standby (single antenna configuration), WWVB radiates 27 kW.

4. Modes of Operation

WWVB can operate in two broadcast modes: single antenna or dual antenna. The single antenna mode consists of a the 60 kHz WWVB signal being broadcast from one antenna, with the other antenna grounded. This mode has a normal radiated power level of about 27 kW, and is used occasionally when maintenance or repairs are being performed on the other antenna system.

WWVB is normally operated in dual antenna mode (see Figure 1.19). In this mode, two transmitters are on the air, simultaneously broadcasting the same WWVB input signal. One transmitter feeds the north antenna, and another feeds the south antenna. The transmitters drive the antennas at equal current levels.

5. Broadcast control

The WWVB broadcast is controlled by the RF switch matrix and the control console. The switch matrix allows any transmitter to be connected to either antenna or the dummy load, and the console contains switching and monitoring equipment that enables the operator to activate or deactivate the transmitters into these loads, and to monitor the power levels and operating status of the transmitters.

6. RF Switch Matrix

A simplified schematic representation of the RF switch matrix is shown in Figure 2.16. The switch is rated for 50 kW average power, and is operated manually. The unit is a strip line switch with three sets of RF busses on either side of a grounded vertical baseplate. Transmitter and load connections are made with 3 1/8 in (79 mm) coaxial transmission line. The three transmitters are connected to the rear busses, and the three loads are connected to the front set. The busses are spaced off the baseplate to maintain a 50 Ω characteristic impedance through the switch. Connections between the transmitter and load busses are made using contacts mounted on rams that pass through holes in the baseplate. When the rams are manually pulled out to the deselected position, the contacts act to complete the path to the adjacent vertical and horizontal rams. When a transmitter is patched into a particular load, that ram is pushed in to a locked, selected position that interrupts the path to adjacent

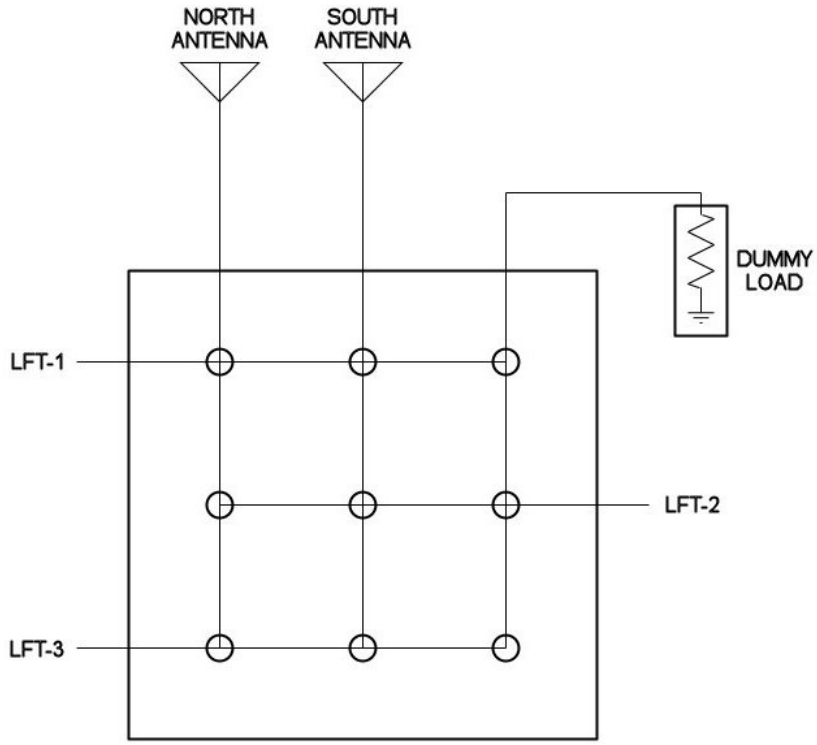

Figure 2.16. RF switch matrix for WWVB transmitters.

switches and connects the transmitter to the load. Interlock switches are also configured to track the switch configurations; this information is sent to the control console.

7. Control Console

The control console uses a programmable logic controller (PLC) that constantly monitors the operating status of the broadcast. The PLC is programmed to prevent operating modes that would be unsafe to personnel or damaging to the equipment. For example, interlocks are provided to prevent more than one transmitter operating into a single load, or to allow a transmitter to operate without a load. Interlocks fitted to the access doors on the transmitters and inside the helix houses prevent injury to personnel. The PLC also performs as part of the automatic tuning system.

8. Automatic Tuning

Unlike the WWV antennas, which are single towers that have static operating characteristics, the WWVB antennas are designed to move somewhat with wind or ice loads. When this happens, the impedance they present to the transmitters changes with their movement. This causes the reflected (reverse) power to increase, and the radiated (forward) power to decrease. To compensate for this, automatic antenna tuning (autotune) systems have been installed. These systems turn the variometers (variable inductors) located in each helix house to maintain the optimal impedance match with the transmitters.

The autotune systems use a phase comparator located in the local control unit in each transmitter. The comparator monitors the phase difference of current and voltage samples taken from the output of the transmitter. When the antenna is properly tuned to the transmitter, the current and voltage are essentially in phase. When the tuning changes due to antenna movement, the voltage and current phase relationship changes. The comparator senses this change, and sends a command for a change in variometer position to the PLC, which tunes the variometer to correct the impedance mismatch. The autotune system also maintains the relative phase of the broadcast signal.

9. Transmitters

The AN/FRT-72 transmitters are linear amplifiers, and the four power amplifier (PA) tubes are configured for Class AB_1 operation. A block diagram of the transmitters is shown in Figure 2.17. The 2 V peak-to-peak WWVB signal is fed from the control console to the local control unit in the transmitter. This unit interfaces the transmitter internal control circuits with the remote console, by way of a microprocessor and communications bus, and also allows local operation of the transmitter in certain configurations. The local control unit sends the low level WWVB signal to the solid state driver amplifier, which raises the power of the signal to about 5 V peak-to-peak and sends it on to the four PA tubes.

The tubes operate in two pairs. Each pair is configured as a push-pull amplifier, and the outputs are combined in a plate transformer. The transformer secondaries are combined in a combiner/sampler unit, that is connected to the RF switch matrix using rigid transmission line. Output voltage and current samples are sent to the transmitter local control unit, and from there

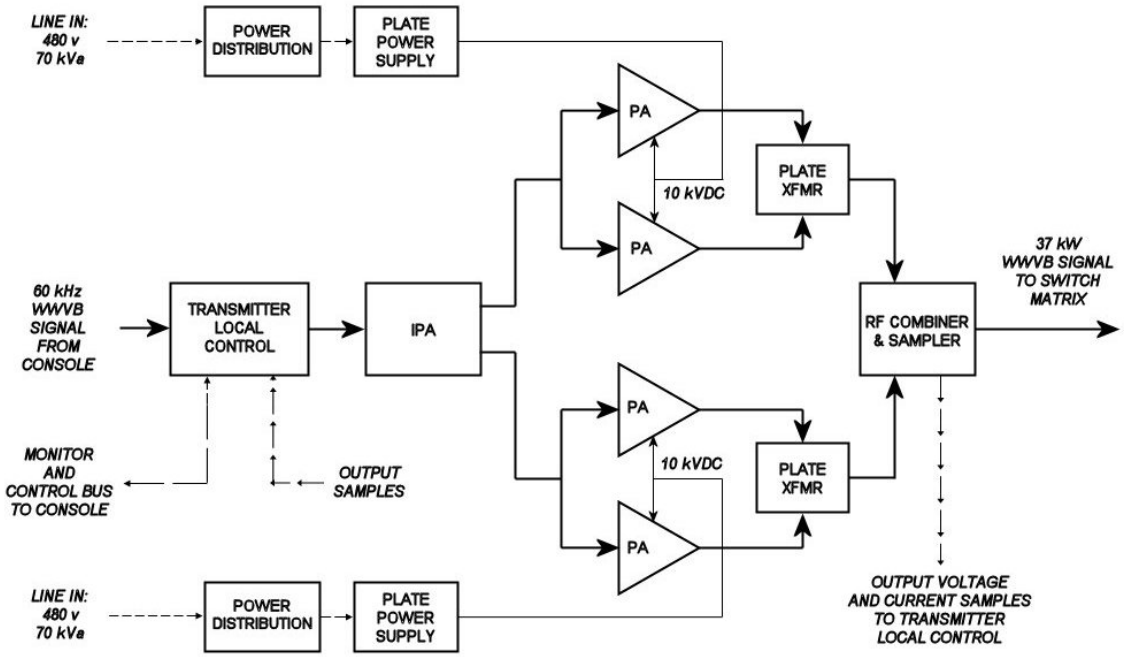

Figure 2.17. Block diagram of WWVB transmitter.

to the console. Although the transmitters are rated at 50 kW forward power, they are normally driven at about 37 kW in dual antenna mode, which achieves an effective radiated power of 50 kW. The transmitters are about 44 % efficient.

The transmitters contain overload circuits that will shut off the 10 kV DC plate power supply or the RF input in case of equipment malfunctions or high reflected power levels. These overload events could be caused by several factors, such as high wind gusts, lightning, or a defective tube or other component. Often the events are short in duration and the transmitter can be safely restored to normal operation in a few seconds. This is accomplished by an automatic overload recycling system, which resets the overload relay and restores the plate power supply. The system is set at three recycles; if after the third attempt an overload condition still exists, the plate power supply is disabled. In the case of high wind gusts or lightning, the transmitter local control unit monitors the reflected power levels and disconnects the drive to the transmitter if these levels exceed a preset level. The drive is restored after a preset number of seconds; if the abnormal condition persists after three tries, the drive is disabled.

10. Helix Houses

The two helix houses are where the on-line transmitters are connected to the antennas. They contain components that match the 50 Ω impedance of the transmitters to the much lower impedance of the antennas. The matching circuits are primarily inductive to cancel the inherent capacitance of the electrically small antennas.

Figure 2.18. Interior view of helix house.

The helix houses are named for the large helical coil that was installed there as part of the original WWVB and WWVL antenna matching equipment. When the station was upgraded, the coils were removed and a variometer and other coupling components installed that were capable of handling the higher power output of the newer transmitters. The two helix houses contain identical components. A view of the interior can be seen in Figure 2.18.

A simplified schematic diagram of one of the WWVB helix houses is shown in Figure 2.19. A 3 1/8 in (79 mm) flexible coaxial transmission line is run from the RF switch matrix output in the transmitter building to each house, along with fiber optic and copper telemetry and control cables, and line voltage cables. All conductors are run in a concrete-lined trench for protection. The transmission line is 417 m in length to the north helix house, and 423 m long to the south house.

At the helix house, the transmission line is terminated inside a fenced area in the building. The cable is connected first to a "tee" network. Coupling inductors are installed in parallel with the output of the tee; one coil is switched with an RF relay to change the impedance of the system for single antenna operation. This is necessary because when both antennas are ungrounded, as in dual mode, their characteristics change due to mutual coupling. In the normal dual antenna operation mode, the relay is in the unpowered, normally open position.

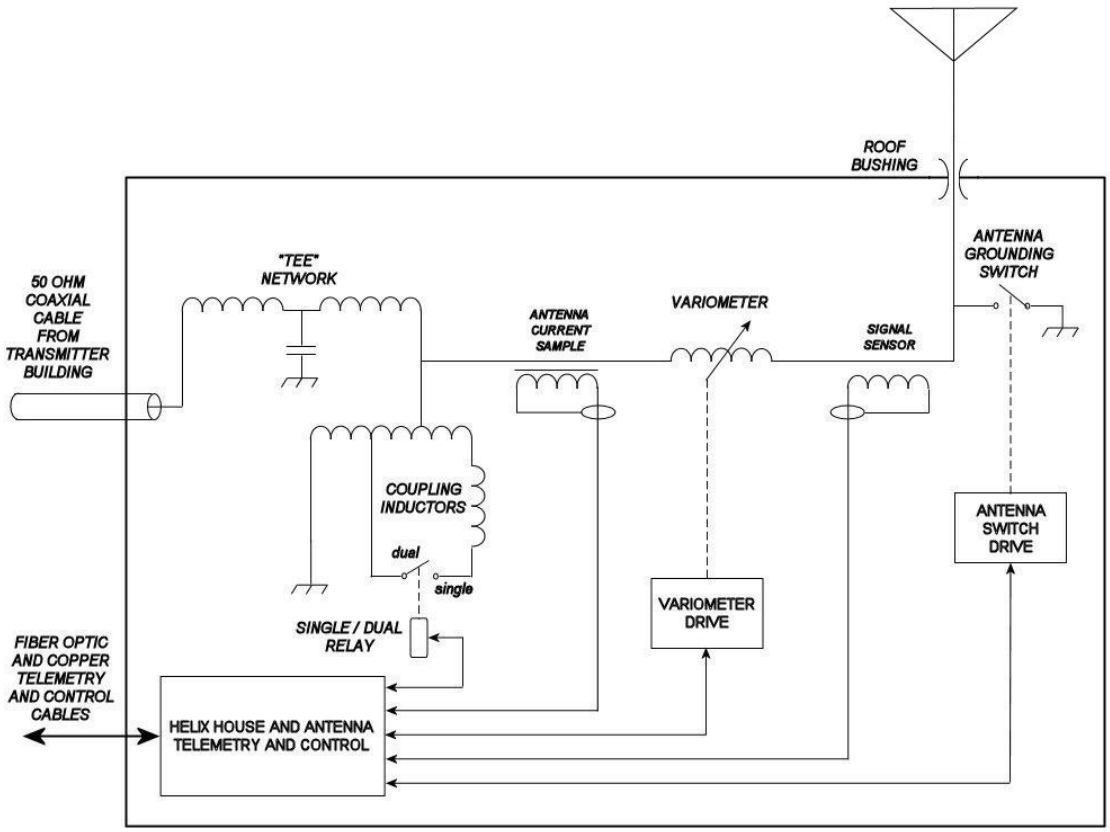

Figure 2.19. Simplified diagram of WWVB helix house.

The antenna current is sampled by a current transformer, and sent to the control console in the transmitter building via fiber optic cables. Another coil, mounted next to the variometer, is used to supply phase and signal status information to the screen room.

The variometer is a physically large inductor consisting of a fixed horizontal winding called a stator, with a smaller moveable winding rotor mounted inside on a vertical shaft. This rotor is turned by means of a reversible motor installed at the base of the shaft, underneath the stator. Telemetry and control circuits allow the variometer motor to be operated in either direction automatically, which varies the inductance of the matching networks. In this way, the autotuning system keeps the antenna at the optimal impedance during windy or icy conditions that effect the impedance of the antenna.

The antenna grounding switch is mounted above the variometer, near the ceiling of the helix house. It consists of two graphite spheres about 100 mm in diameter, one of which is fastened to the input bus to the roof bushing. The other sphere is electrically grounded, and mounted on the end of a spring-loaded telescoping shaft, which is operated by a wire rope connected to a

motor near the floor. When the ground command is given, the motor is switched on, unspooling the cable and allowing the spring to drive the two spheres together. In the ungrounded position, the distance between the spheres has been set to allow the open switch to function as an arc gap for lightning protection.

Telemetry and control equipment is located outside the fenced area, where it is accessible while the antenna is in use. Local controls are installed to allow the antenna ground switch and the variometer drive to be actuated from the helix house.

The gate in the fence is equipped with a lock, the key to which is located in the helix house control cabinet. There, the key is kept in another lock, which has built-in electric switches. These are configured such that when the lock releases the key for use in the gate lock, the antenna grounding switch is actuated. Also, the gate itself has an interlock switch that prevents the connected transmitter from operating when it is opened. This arrangement prevents the antenna from being ungrounded or a connected transmitter from being activated while personnel are inside the fenced area.

11. Antennas

The two WWVB antennas are monopoles. Although they are physically much larger than the WWV antennas, they are electrically quite small with respect to the wavelength of 60 kHz. Ideally, an efficient antenna must have a radiating element of at least one-quarter wavelength. However, at 60 kHz the wavelength is about 5000 m, meaning that a quarter-wavelength antenna would be about 1250 m tall, which is impractical to build. One way of constructing antennas for the low frequency band involves making the vertical element as high as possible, and adding electrical "length" horizontally at the top of the radiating element. This technique is known as top loading. The loading element is sometimes called a top hat or capacitance hat. As described in Chapter 1, the two WWVB antennas each consist of a top hat, downlead, and ground plane. The height of the towers from which the antenna is suspended is 122 m, with the maximum distance between towers of 573 m. The north antenna coordinates (WGS-84 datum) are 40° 40.849 N, 105° 03.035 W; the south antenna coordinates are 40° 40.465 N, 105° 02.685 W. The distance between the downleads is 866 m.

Although the WWVB antennas were built in the early 1960's, they have both been overhauled and upgraded in the late 1990's to accommodate the higher power broadcast allowed by the installation of the AN/FRT-72 transmitters. After the upgrades, extensive engineering studies were undertaken to determine the operating characteristics of these antennas [42, 43]. The effective or electrical height of each antenna was determined to be approximately 86 m. As shown in Table 2.5, the resistance of the antennas is much lower than that of the perfectly sized WWV antennas, due to the size of the radiating element, which is extremely short when compared with the wavelength. Whereas the WWV antennas can be built such that their gross resistance (R_g) is very nearly 50 Ω, R_g for the WWVB antennas is less than 1 Ω when operated in single mode. In dual mode, the two antennas interact and mutual resistance becomes a factor.

Table 2.5. Resistance and efficiency of WWVB antennas.

	Single		**Dual**		
	North	South	North	South	Mutual
Gross resistance R_g (ohms)	0.859	0.825	1.264	1.151	0.366
Radiation resistance R_r (ohms)	0.464	0.464	0.104	0.104	0.360
Radiation efficiency	56.30 %	54.00 %		68.80 %	

When operated in single antenna mode, the north antenna was found to be 56 % efficient, and the south antenna 54 % efficient. However, when operated in dual antenna mode, the two antennas effectively become an array, which has an efficiency of nearly 69 %. In the world of LF broadcasting, this is an impressive figure, and it allows 50 kW to be radiated with only about 37 kW input to both antennas. These conservative transmitter operating parameters increase the reliability of the signal, since the transmitters are not operating near their limits and are thus able to tolerate higher levels of reflected power and still stay on the air. An additional bonus is the increased life of tubes and other broadcast components.

The intrinsic bandwidth of the antennas was found to be 310 Hz for the north and 263 Hz for the south [44]. The combined bandwidth has not been measured but has been calculated to be about 411 Hz. When loaded by the transmitter, this increases by a factor of about 1.5 to a estimated bandwidth of slightly over 600 Hz.

The ground side of the antenna matching circuit is connected to the antenna ground plane. Each of the approximately 300 tinned, copper-braided wires in the ground plane is about 3 mm in diameter. These wires extend radially out from the helix house foundation, where they are brazed to a buried peripheral 13 mm copper cable. This cable is soldered to copper straps which extend out of the concrete foundation at 2 m intervals; the straps are incorporated into a network of copper straps within the foundation, and connect to stubs that protrude from the floor at several locations within the helix house, where the connection to the antenna equipment is made.

One reason the Fort Collins site was originally chosen was the high soil conductivity, measured at 14.5 millimhos per meter to a depth of 0.45 m. Highly conductive soil means that ground losses from a transmitting antenna are low, improving the antenna's efficiency [44].

12. Monitoring and Alarm Systems

Monitoring and alarm systems for WWVB are combined with the systems for WWV and are described in that section.

D. Technical Description of WWVH

The design and configuration of Radio Station WWVH in Hawaii bears many similarities to that of WWV. The main differences are found in the broadcast equipment, which is often of different manufacture, and in the physical layout of the facility and equipment.

1. Timing System

The frequencies broadcast by WWVH originate in the main screen room. Three independent time and frequency generation systems operate continuously, each in a separate equipment rack. One of the systems or racks is selected as the on line unit, or site master clock. Outputs from each rack are sent to monitoring and data logging equipment, and to a controller that sends the RF output from the selected rack to the transmitters.

Each time and frequency generation system is made up of a frequency standard, a frequency divider/distribution amplifier, a time code generator (TCG), and monitoring and ancillary outputs. Normally, all the frequency standards are commercially available cesium oscillators. A rubidium oscillator is sometimes used as a backup in case of a failure of one of the cesium oscillators. Figure 2.20 shows a simplified block diagram of the WWVH time and frequency

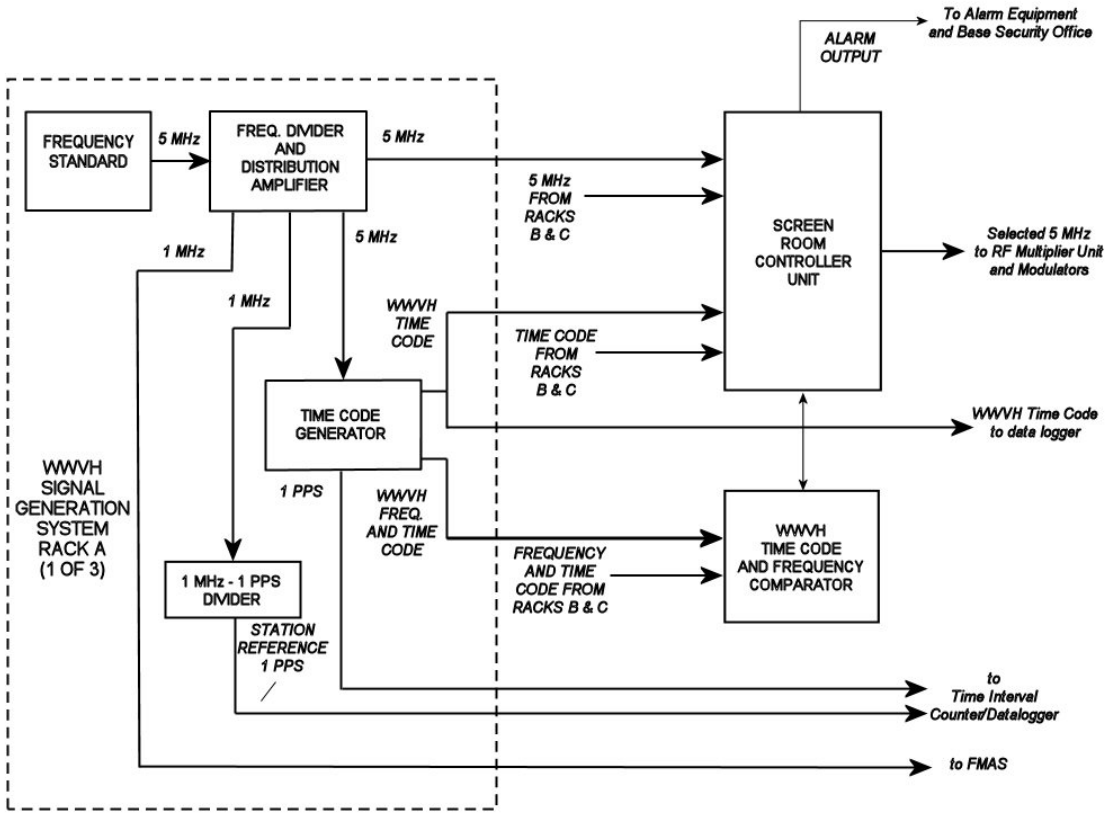

Figure 2.20. Simplified diagram of WWVH time and frequency generation system.

generation system and its interconnection with monitoring and control equipment. The 5 MHz output from the frequency standard is sent to a divider/distribution amplifier, which distributes the signal to the TCG, the FMAS system, and a 1 MHz to 1 PPS divider.

2. Broadcast Format

The WWVH broadcast format is very similar to that of WWV. It contains standard carrier frequencies, standard audio frequencies, time intervals, voice time announcements, an identical BCD time code, and official announcements. All frequencies and tones are derived from the site master clock.

The four WWVH carrier frequencies (2.5, 5, 10, and 15 MHz) serve as standard reference frequencies. All audible frequencies and tones are generated in the TCGs. These units are nearly identical to the WWV TCGs in construction, and differ only in their internal programming, and in that they output a higher frequency (1200 Hz vs. 1000 Hz) seconds and minutes tone. Voice time announcements and the station identification message are stored in the TCG, using a pre-recorded female voice. Official announcements are stored in a separate voice storage system, that is accessed via telephone by the announcing agencies. Figure 2.21 is a simplified block diagram of the WWVH audio signal generation and distribution system.

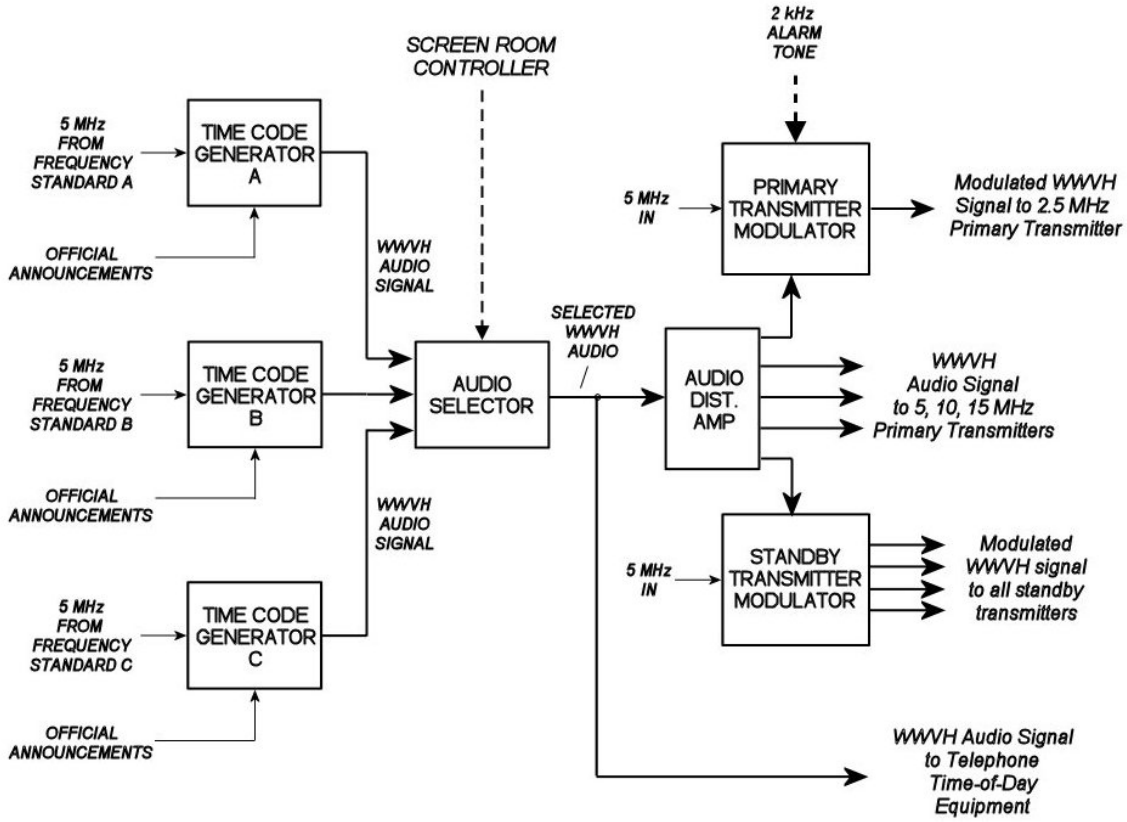

Figure 2.21. Simplified diagram of WWVH audio signal generation system.

a) Standard Carrier Frequencies

WWVH standard carrier frequencies are derived from the site master clock. Figure 2.22 shows a simplified diagram of the carrier frequency generation system. A 5 MHz signal is sent from each time and frequency generation rack to the screen room controller, which sends the selected signal on to an RF multiplier unit, which outputs a 5, 10, and 15 MHz signal that is sent directly to the primary transmitters for those frequencies. The selected 5 MHz output from the controller is also sent to the modulator for the 2.5 MHz primary transmitter, as well as the standby transmitter modulator. These units create the composite audio signal for these transmitters.

b) Voice Time Announcements

The WWVH voice time announcements are broadcast once each minute. They are made using a female voice, and begin about 15 s before the beginning of the minute. The announcements last about 7 s. For 1452 UTC, the announcement would read:

"At the tone, fourteen hours, fifty two minutes, coordinated universal time."

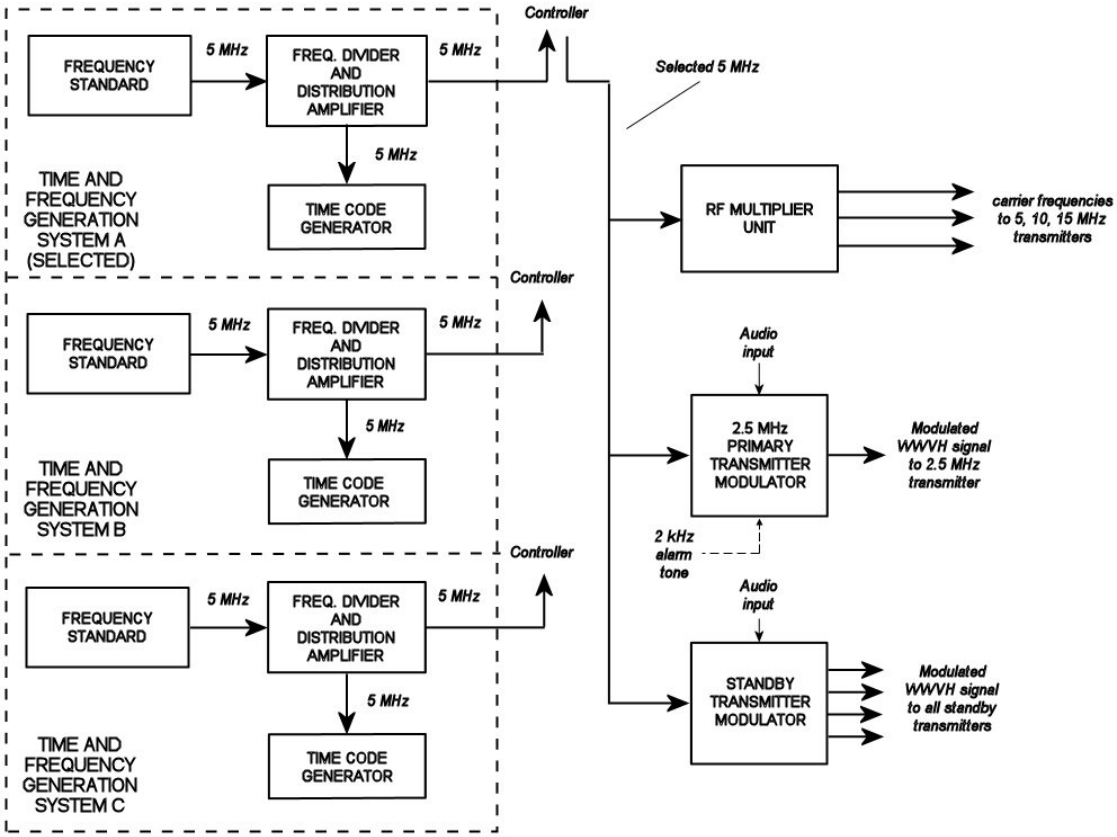

Figure 2.21. Simplified diagram of WWVH carrier frequency generation system.

The announcement is followed by about 8 seconds of ticks without a tone, then a short 1200 Hz tone indicates the top of the minute. A station identification message is broadcast twice each hour. The station ID reads as follows:

> *"National Institute of Standards and Technology Time: this is Radio Station WWVH, Kauai, Hawaii, broadcasting on internationally allocated standard carrier frequencies of two-point-five, five, ten, and fifteen megahertz, providing time of day, standard time interval and other related information. Inquiries regarding these transmissions may be directed to the National Institute of Standards and Technology, Radio Station WWVH, Post Office Box 417, Kekaha, Hawaii, 96752. Aloha."*

The WWVH station ID announcement lasts for about 37 seconds, and is broadcast during the minute that precedes the tone marking the beginning or midpoint of the hour. For example, the announcement runs at 1059 UTC and 1129 UTC. It is stored in its entirety in read-only memory in the TCGs.

c) Standard Time Intervals

Like WWV, standard time intervals broadcast on WWVH are indicated by various tones of various lengths. Intervals of seconds, ten seconds, minutes, hours, and days are all part of the broadcast. The time intervals are indicated as follows:

- Seconds: bursts of 1200 Hz tone; most are 5 ms long, which simulates the ticking of a clock. These ticks are omitted on the 29th and 59th seconds. The second that begins each minute is indicated by a longer tone.

- Ten Seconds: indicated on BCD time code.

- Minutes: 800 ms burst of 1200 Hz tone at the beginning of every minute except the beginning of the hour.

- Hours: 800 ms burst of 1500 Hz tone at the beginning of every hour. Also, the 440 Hz tone is broadcast on minute 1 of each hour, except for the first hour of each day.

- Days: the 440 Hz tone described above is omitted during the first hour of each day.

d) Standard Audio Frequencies

WWVH also broadcasts standard audio frequencies during most minutes of every hour. Figure 2.23 illustrates the WWVH audio broadcast format. Audio tones of 500 Hz and 600 Hz are broadcast on alternating minutes, and a 440 Hz tone is broadcast once each hour, except the first hour of the day. The tones are normally broadcast in the reverse order of WWV; for example, if a 500 Hz tone is being broadcast on WWV on a particular minute, a 600 Hz tone is broadcast on WWVH on that same minute. The 440 Hz tone is broadcast on minute 2 on

WWV, and minute 1 on WWVH. The tones are inserted in the broadcast for the first 45 seconds of their allocated minutes, and are followed by the voice announcement indicating the time, and a silent period (Figure 2.23 wheel insert). The seconds pulses interrupt the tones briefly; each pulse is preceded by 10 ms of silence and followed by 25 ms of silence. The protected zone around each pulse is shown in Figure 2.6.

Longer silent periods without tone modulation are included in several minutes of every hour of the WWVH broadcast format. However, the carrier frequency, seconds pulses, time announcements, and the BCD time code continue during these periods. The purpose of the silent periods on WWVH is to prevent interference with voice announcements on the WWV broadcast. One station will normally not broadcast a tone while the other is broadcasting a voice message. As shown in Figure 2.23, the silent periods for WWVH are from 8 to 11 minutes and from 14 to 20 minutes after the hour, as well as minutes 0 and 30.

e) UT1 Corrections

UT1 information is broadcast in a manner identical to WWV, described in 2.B.2.e.

f) 100 Hz Time Code

WWVH broadcasts the same BCD time code as WWV, described in 2.B.2.f.

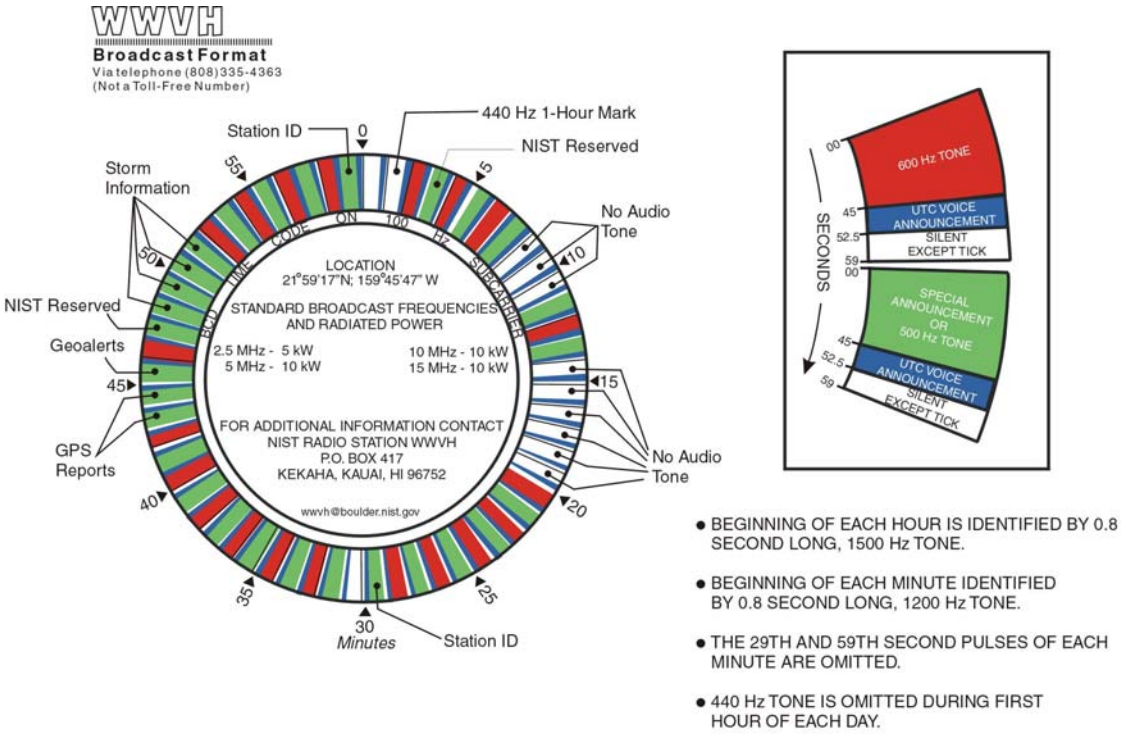

Figure 2.23. WWVH audio broadcast format.

g) Official Announcements

WWVH also carries official announcements by U.S. Government agencies. The announcements are of a public service nature and are limited to 45 seconds per segment. More than one segment may be used by a particular agency. Announcement allocations as of this writing can be seen in Figure 2.23 and are listed in Table 2.6. For more information about the content of the announcements, see NIST Special Publication 432 [38], or contact the sponsoring agency.

Table 2.6. WWVH official announcements.

Minute	Message	Sponsor	Web Site
43,44	GPS satellite status	U.S. Coast Guard Navigation Center	www.navcen.uscg.gov/gps/
45	Geophysical alerts	NOAA Space Environment Center	www.sec.noaa.gov
48	West Pacific high seas storm warning	National Weather Service	www.nws.noaa.gov
49	East Pacific high seas storm warning	National Weather Service	www.nws.noaa.gov
50	South Pacific high seas storm warning	National Weather Service	www.nws.noaa.gov
51	North Pacific high seas storm warning	National Weather Service	www.nws.noaa.gov
52	Other Pacific storm warnings (when necessary)	National Weather Service	www.nws.noaa.gov

In addition to the announcements shown above, NIST reserves minutes 3 and 47 of the WWVH broadcast for occasional special announcements. These segments are used to relate information of interest to users of the time and frequency broadcasts, such as user surveys or changes to the broadcast. When no announcement is present, a 500 Hz tone is usually broadcast.

The WWVH voice storage system was designed and built by station personnel, and is connected to an incoming telephone line dedicated to that purpose. An alternate telephone line is available if the primary line goes down. Users dial into the voice storage system and leave the messages to be broadcast on an allocated channel in that device. At the appropriate time, the time code generators play that message as part of the composite audio signal sent to the transmitters.

h) Modulation Levels and Spectrum Allocation

Described earlier; see 2.B.2.h.

i) WWVH Signal Monitoring

As with WWV, the WWVH signal is monitored at several points: comparator and control circuits, manual timing comparisons, and FMAS. The WWVH system includes a time code and frequency comparator, identical to the unit at WWV, described in 2.B.2.i. This unit monitors the accuracy of the WWVH timing and the stability of the frequency standards.

The WWVH screen room controller communicates with the time code and frequency comparator; if an alarm is sensed the controller switches racks and sends an alarm signal to the WWVH alarm panel.

The WWVH signal is also monitored by manual comparisons. Daily comparisons are made with UTC(NIST) in Boulder, using the GPS common-view technique. The TCG 1 PPS outputs are compared against each other and against a 1 PPS output derived from the frequency standards. Corrections to the frequency standards and time code generators are entered using a nanosecond stepping unit, when required.

The stability of the WWVH frequency standards is monitored by phase comparisons of their outputs. A 100 kHz output from each standard is routed to phase error detection equipment, and the result is sent to a Honeywell (DPR3000) strip chart recorder. The configuration allows comparisons of all standards against each other. The recorder also accepts phase and amplitude inputs from a 60 kHz WWVB receiver, providing a valuable remote monitoring service for that station. A PC is used to download the data from the recorder; it is archived on CD-R disks. The FMAS system [37] also tracks the stability of the WWVH standards.

A microprocessor-controlled time interval counter, designed and built by NIST, is installed in the WWVH screen room. This unit accepts 1 PPS inputs from each frequency standard and TCG, and logs the difference hourly. The data can be used to troubleshoot and isolate problems in the timing systems. A computer is connected to the counter and is used to archive the data.

3. Frequencies and Power Levels

WWVH broadcasts continuously on 2.5 MHz, 5 MHz, 10 MHz, and 15 MHz. Normal radiated power is 10 kW on 5, 10, and 15 MHz, and 5 kW on 2.5 MHz. When standby transmitters are operating, radiated power is 5 kW for all frequencies. Table 1.3 shows the transmitter designations and configuration.

New transmitters made by AEL Corporation were installed when WWVH was moved from Maui to Kauai in 1971. These units were linear amplifiers, with the final amplifier tube operated class AB_1. The final amplifier is a (4CX50,000J) high power vapor-cooled tube, which has an overall efficiency of about 20 %. A simplified block diagram of a modified AEL transmitter can be seen in Figure 2.24. The low-level RF WWVH signal is sent from the modulator to the transmitters, which amplify it through three stages to 5 kW at the output of the transmitter. After the Elcom-Bauer transmitters were installed for the 5, 10 and 15 MHz broadcasts in 1983, the 2.5 MHz primary and standby transmitters were refitted with smaller, air-cooled final amplifier tubes that raised their efficiency to about 33 %.

The Elcom-Bauer transmitters have a final amplifier stage operated class C, with an overall efficiency of about 45 %. A simplified block diagram of this transmitter is shown in Figure 2.25. The Elcom-Bauer transmitter receives the carrier frequency from an RF multiplier circuit, and the WWVH composite audio signal from the selected TCG. The carrier is amplified by the solid-state RF exciter and driver amplifiers, then fed to the unbiased grid of the 4CX15,000A power tube. The audio signal from the selected TCG is amplified separately using two solid-state amplifiers, then fed to dual 4CX5,000A power tubes configured as a Class AB_1 push-pull amplifier. The power tubes, together with a choke and modulation transformer, create the 10 kW modulated signal.

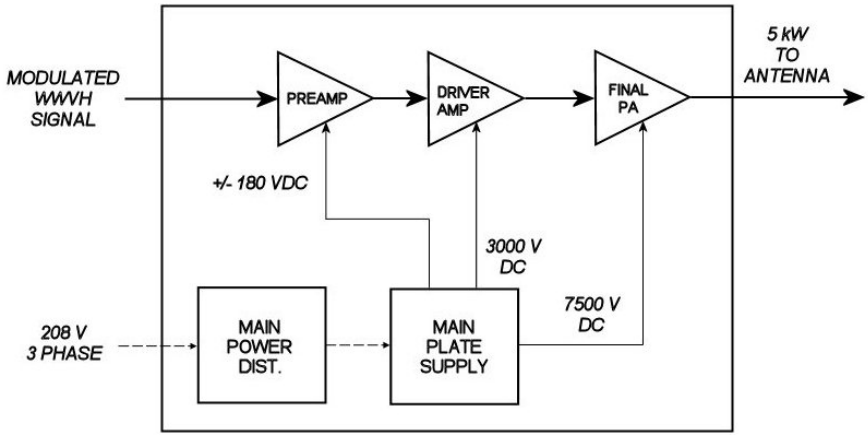

Figure 2.24. Simplified block diagram of modified AEL transmitter.

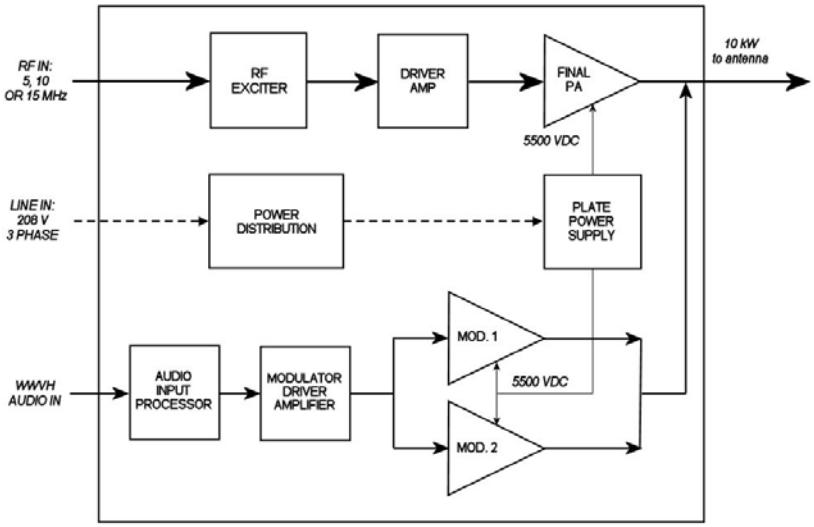

Figure 2.25. Simplified block diagram of Elcom-Bauer transmitter.

4. WWVH Antennas

WWVH antenna data is listed in Table 2.7. Each primary phased-array antenna for the 5, 10, and 15 MHz broadcasts consists of dipole towers spaced one quarter-wavelength apart, aligned to a bearing of 260° east of true north. A recent antenna modeling study done by the WWVH staff revealed that the antennas have a cardioid radiation pattern with a 20 dB front-to-back ratio; the maximum gain of the signal is to the west. Each antenna is equipped with a double-stub tuning network installed between the bases of the towers, which precisely matches the antenna impedance to the 50 Ω output impedance of the

Table 2.7. WWVH antenna data.

Frequency (MHz)	Use	Height (m)	Type	Latitude	Longitude
2.5	Primary	29.9	quarter-wave base-fed monopole	21º 59' 20.9" N	159º 45' 52.4" W
2.5	Standby	22.9	base-fed monopole with adjustable matching equipment	21º 59' 19.2" N	159º 45' 46.2" W
5.0	Primary	36.3	phased array, two half-wave dipoles	21º 59' 10.8" N	159º 45' 44.8" W
10.0	Primary	18.3	phased array, two half-wave dipoles	21º 59' 18.2" N	159º 45' 51.3" W
15.0	Primary	12.2	phased array, two half-wave dipoles	21º 59' 15.3" N	159º 45' 50.0" W
15.0	Standby	5.5	phased array, two quarter-wave base-fed mono-poles (prototype)	21º 59' 23.9" N	159º 45' 58.03" W
Broadband #1	Standby	16.5	base-fed monopole with adjustable matching equipment	21º 59' 26.12" N	159º 45' 56.47" W
Broadband #2	Standby	16.5	base-fed monopole with adjustable matching equipment	21º 59' 30.22" N	159º 45' 59.53" W

transmitters. The output of the tuning network is directly connected to the rear (easternmost) tower, but an additional length of transmission line shifts the phase of the signal 90° to the forward (westernmost) tower, which causes the cardioid effect.

A U. S. Navy engineering report was prepared on the current state of the WWVH antennas in 1999. Figure 2.26 shows the radiation of an idealized 5 MHz phased array antenna obtained from this report. The modeled antenna is similar (but not identical) to the WWVH antenna, so Figure 2.26 should be considered an approximation of the actual radiation pattern.

The omnidirectional antennas for the 2.5 MHz primary broadcast, the 2.5 MHz standby antenna, and two broadband antennas (normally configured for the 5 and 10 MHz broadcasts) are all base-fed monopoles made of fiberglass, as described in Chapter 1. The matching equipment for all standby antennas is manually adjustable for any frequency broadcast by WWVH, although the 2.5 MHz broadcast would normally be broadcast only on the taller 2.5 MHz standby antenna. All standby antennas are rated for 10 kW; the radiation pattern for the monopole antennas is similar to that of the WWV half-wave dipole antennas (Figure 2.10) [40].

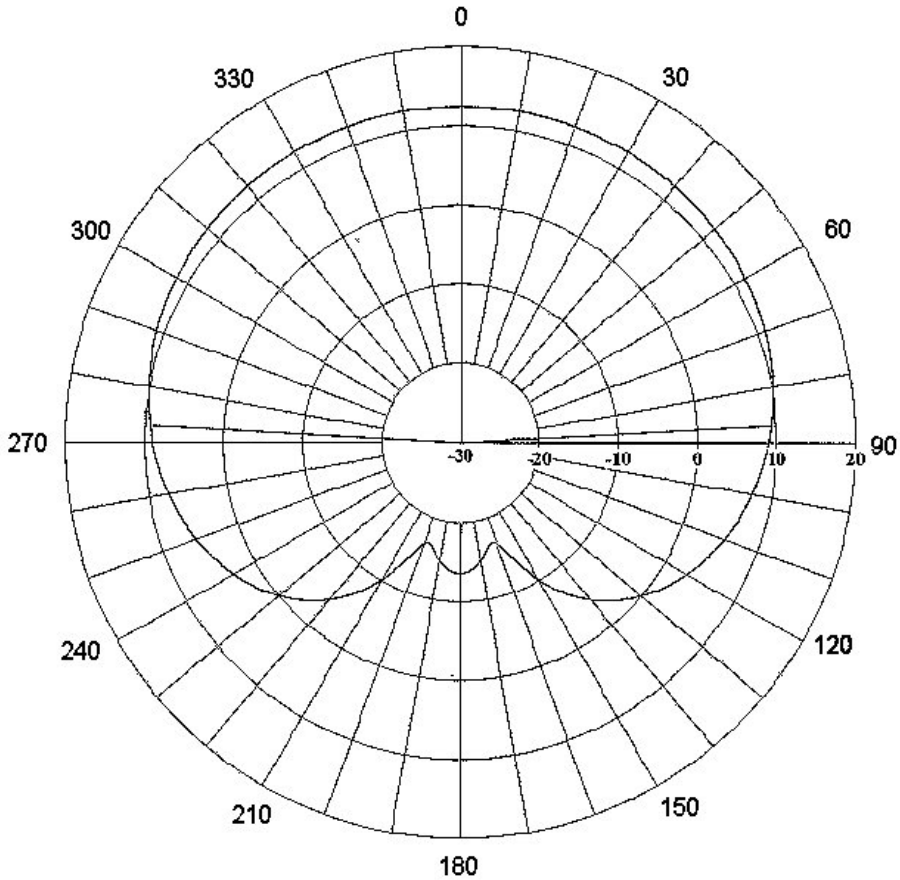

Figure 2.26. Approximation of radiation pattern from 5 MHz phased array antenna.

5. WWVH Broadcast Monitoring and Alarm Systems

WWVH is manned during normal working hours. Automated systems are installed to monitor the timing, broadcast, and other equipment. WWVH has three independent alarm and monitoring systems.

Transmitter status is monitored by an RF carrier/audio detection system similar in principle to the one installed at WWV. The system senses a sample from each on-air transmitter and demodulates the signal to the carrier and audio component. A 1200 Hz filter is applied to the audio portion and a missing-pulse detector circuit is used to detect the 1 pps tick. If the carrier or tick is not detected, the primary transmitter is turned off and the standby transmitter for that frequency is activated. If an RF sample is not detected from the standby antenna, an alarm is sent to the WWVH Alarm Panel.

All major alarms are monitored by the WWVH Alarm Panel. The system monitors transmitter failure, high/low screen and transmitter temperatures, TCG and screen room controller failure,

status of the incoming electrical power, and the fuel level in the standby generator day tank. If a major alarm is not resolved in 5 minutes, signals are sent to the automatic dialing system, naval base security office and staff's radio receiver at home.

The automatic dialing system dials the home phones, cell phones, and pagers of station personnel in a predetermined order. When the call is answered, a coded signal is heard that indicates a specific problem. An alarm is also sent to the naval base security office, which notifies station personnel (via home phone, cell phone, or pager) of a problem at the station. The security office also monitors fire and security alarm systems.

Another alarm system operates in parallel with the two described above. It is independent of the telephone system and has been used exclusively after the hurricanes in 1982 and 1992. In the event of one of the alarm conditions mentioned earlier, an audio tone of about 2 kHz is placed on the 2.5 MHz broadcast for the first 45 s of every minute (the tone is not derived from the site master clock and is intended for alarm purposes only). The tone is removed during the time-of-day voice announcement. Each staff technician and the station engineer has a modified WWV/WWVH receiver in their homes, which "listens" for the 2 kHz tone. When the tone is detected, a light on the receiver is activated. The receiver also has a loop antenna to null the WWV broadcast. In case of a problem with the 2.5 MHz broadcast, the receiver notes its absence and another light is turned on. The indicator lights will remain in the on condition until manually reset by the user. The 2 kHz tone is removed from the 2.5 MHz broadcast 20 minutes after the alarm is first indicated.

A data logging system, consisting of a programmable microcontroller circuit and PC, is used to record events occurring at the station. The data logging circuit continuously monitors the status of each transmitter and logs any change of state, and the duration of that change. It also monitors the "silent periods" in the broadcast, and the status of the equipment alarm panel and security alarm. The data is time tagged on the PC and archived as a text file. The PC clock is synchronized to UTC using the Automated Computer Time Service (ACTS) [36].

The IRIG-H code (described in 2.D.2.f) from the TCG is also monitored using a programmable microcontroller circuit and PC. The pulse width modulated signal is translated to a 60 character string of "1", "0" and "P" then stored to the PC. If necessary, the archived data can be used to determine whether a customer's radio controlled clock is correctly decoding the broadcasted signal. All monitoring, logging, and alarm systems discussed above were designed and built by station personnel.

6. Commercial Electric Power Monitoring

The status of the incoming 208 V AC electric power is monitored and logged by a three-phase voltage disturbance analyzer made by Powertronics (PQR2020). The system measures nine types of disturbances (frequency, voltage and noise) and can log 6000 events in nonvolatile RAM. When necessary the data is downloaded to a PC for analysis and archived on disk.

7. UPS Monitors

The Powerware (9170+) uninterruptible power supply (UPS) is a double conversion unit with near zero switching time. It is a true on-line unit used to protect the sensitive electronic equipment in both screen rooms. The unit is equipped with computerized event and alarm logs that document any major disturbance in the electrical power. The unit has two independent power supplies, giving it built-in redundancy if one power supply fails.

E. Telephone Time-of-Day Service

NIST radio stations WWV and WWVH both offer a telephone-time-of-day service (TTDS) where callers can hear an audio simulcast of the radio broadcast by telephone. This section describes how this service works.

1. WWV Telephone Time-of-Day Service

Since 1971, the WWV audio signal has been available by telephone by dialing 303-499-7111. The system uses components or services located at the local telephone company, at the NIST laboratories in Boulder, and at WWV and WWVB.

Customers dialing 303-499-7111 are connected to a call forwarding system at the telephone company central office in the Boulder area, where calls are immediately forwarded on a dedicated channel to the Boulder labs private branch exchange (PBX) system. The Boulder PBX is connected with a similar WWV/WWVB PBX via a T1 voice/data connection; 15 channels of the T1 are dedicated to the TTDS. At the Boulder PBX, incoming calls are converted to digital format, placed in a queue or "hunt group," and routed to the next available channel of the T1. At the station PBX, the calls are demodulated and sent to one of five commercial call screening units. These devices are normally found at offices or businesses to route callers to various extensions, and are sometimes referred to as a "phone tree." In that application, the caller would normally hear a prerecorded greeting, followed by a list of options or extensions that could be accessed. After making a selection, the caller would hear music while on hold, until the extension was rung. However, in the TTDS application, no greeting is played. The caller is immediately placed on hold, and instead of music, the caller hears the audio signal from the on-air WWV time code generator. The screening unit disconnects the call after a preset time, normally 3 minutes. The length of call can be shortened, if necessary, to accommodate more calls.

The TTDS system can handle up to 15 incoming calls simultaneously. Although the call forwarding system cannot connect two calls arriving at the same instant, the transfer rate is very rapid and is able to process traffic in a way that is transparent to the user. Once a call is answered by the screening unit, that channel is active for the full 3 minutes even if the caller hangs up beforehand. Therefore, the capacity of the system is 300 calls per hour (20 calls per hour × 15 channels). A simplified diagram of the WWV TTDS system is provided in Figure 2.27.

As of this writing, Qwest Communications, Inc. provides local telephone service to the Boulder labs, and owns and maintains the TTDS call forwarding system. Qwest also provides the T1

service between Boulder and the station. The PBX at the Boulder labs is a Nortel Meridian system, as is the PBX at WWV/WWVB. The call screening units are made by Interalia, Inc, and are located next to the station PBX in the WWVB building.

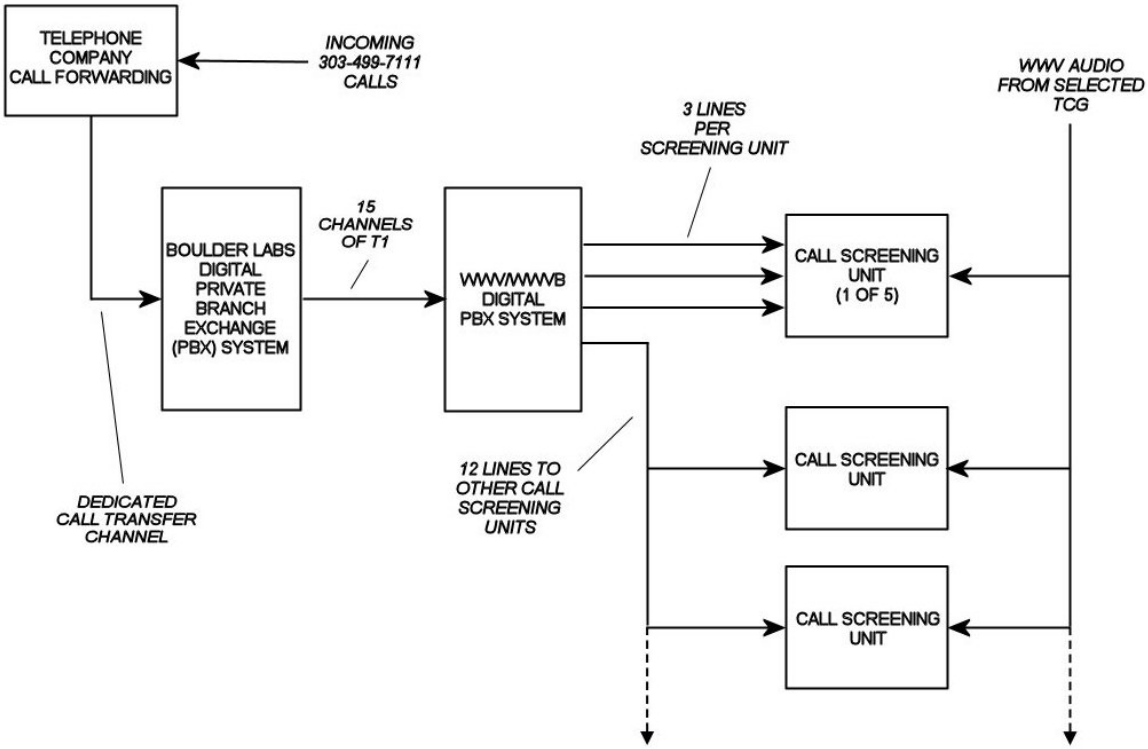

Figure 2.27. Block diagram of WWV Telephone Time-of-Day System.

2. WWVH Telephone Time-of-Day Service

The WWVH Telephone Time-of-Day service was initiated in April 1973 and designed and built by station staff. A caller dials 808-335-4363 and is connected to the WWVH audio signal. The system is capable of handling a maximum of 480 calls per day.

Chapter 3

Operational Procedures

This section describes the operational procedures of the NIST radio stations. These procedures must be performed to keep the station running smoothly, and to control the quality of the broadcast signal. It also discusses how failures at each station are reported and addressed.

A. Hardware Maintenance

1. Transmitters and Broadcast Equipment

The NIST radio stations' transmitting equipment requires frequent maintenance to keep it operating smoothly. High voltage and RF circuits in the transmitters and antenna gear have specific requirements for cleanliness, grounding, and general upkeep not found in other electrical gear.

Each piece of broadcast equipment is subject to routine periodic maintenance. For the transmitters in all stations, this involves taking the unit off line and bringing up a standby transmitter to take over the broadcast during the maintenance period. A transmitter will be disconnected from electrical power and all tubes and readily detachable components removed. The entire transmitter is cleaned and inspected for burned, worn, or broken components. Parts are lubricated, serviced, or replaced as required, and the transmitter is reassembled and tested in a dummy load or on the air before being placed back in service. The maintenance interval varies with the stations; at WWVH, the corrosive effects of the salt air from the nearby ocean, coupled with high relative humidity require bimonthly maintenance routines for the primary transmitters; the dry air and semi-arid climate around Fort Collins, as well as the fact that WWV transmitter intake air is well filtered allows a six month maintenance interval. However, the WWVB LF transmitters use a much higher volume of cooling air than the HF transmitters, and their higher operating voltages require a bimonthly maintenance cycle. Standby transmitters at both HF stations are usually subject to an annual maintenance interval; at WWVB, all the transmitters are identical, and are rotated into service as required.

Transmitter matching equipment also requires periodic cleaning and inspection. At WWVB, the matching equipment resides in two three-story helix houses, with coils and transformers that operate at high voltages and currents. Maintenance is performed semi-annually. Surface areas are cleaned with laboratory alcohol and compressed air, electrical connections are checked for tightness, and the variometer drive systems are lubricated. At WWVH, the antenna matching equipment is mounted in weatherproof boxes at the base of each fiberglass whip, and is inspected bi-monthly.

Antenna maintenance is also performed periodically. At WWV, the climate is very kind to electrical connections and metal surfaces; maintenance consists of semi-annual visual and

mechanical inspections of hardware and connections, usually from the ground. Light bulbs must be changed annually in the WWVB towers and the 2.5 MHz antenna; this is performed by contractors. WWVB antenna maintenance is much more involved; it involves deploying four gasoline powered generators to electric winch motors at the base of each tower, and lowering the antenna to the ground. The connections are then inspected and repaired as required.

At WWVH, the steel antenna structures require a rigorous maintenance routine, due to the corrosive effect of the salt air. The tower hardware and RF connections are inspected bi-weekly and repaired as necessary, and the towers are painted every two years. The fiberglass towers were installed beginning in 2001, and require periodic painting. Historically, station staff have performed these functions.

2. Timing Equipment

Timing equipment at the radio stations requires minimal maintenance; the equipment is housed in air-conditioned screen rooms, and the incoming supply voltage to the equipment is conditioned by UPS units to minimize disturbances and potential damage to the sensitive equipment. The frequency standards, time code generators and distribution equipment are all monitored continuously for errors or long term drifts.

B. Facilities Maintenance

The screen rooms have redundant air conditioning systems, which are cycled periodically to verify their operation. Standby generator engines are run weekly, and a load test is performed quarterly, where the transmitters and all building loads are placed on the generator for at least one hour.

The remote location of the NIST Radio Stations relative to the Boulder labs requires station personnel to take on a number of other tasks normally associated with support staff. Routine tasks are performed on buildings, roads, antenna fields, air conditioning and ventilation systems, lighting, air compressors, standby generators, electrical wiring and power distribution systems, and portable gasoline powered generators.

More involved facilities maintenance projects and upgrades are handled by the NIST Engineering, Maintenance, Safety and Support Division (EMSS) and/or contractors. Recent major upgrades to station electrical and air conditioning systems have been performed or funded by EMSS. Facilities maintenance requirements such as servicing the standby generators semi-annually are funded by EMSS.

C. Scheduled Tasks

Schedules of the various tasks performed by personnel at the radio stations are shown below. All aspects of station operations and procedures including maintenance, repairs, service, etc. are included in the list.

1. WWV Task Lists

Daily Tasks

- Check status of site master clock vs. UTC(NIST) via GPS common-view method.
- Complete daily log and data sheet with the following elements:
    - Check transmitter status, note overloads/abnormal conditions.
    - Check transmitter monitor program (logs any brief outages during overnight/weekend periods).
    - Check waveform of each broadcast frequency on oscilloscope; tune transmitters as required.
    - Check time and frequency generation systems in screen room: cesium oscillators, time code generators, audio announcements, DUT corrections, ambient temperature, etc.

Weekly Tasks

- Log meter readings for each main transmitter; note and investigate any deviations from normal (non-emergency repairs are made during the normal maintenance cycle).
- Exercise standby generator engine (automated). Engine runs 30 minutes, station remains on commercial power.

Bi-weekly Tasks

- Rotate on-line screen room air conditioning units.
- Log dehydrator hours and investigate unusual activity.
- Check electrolyte in generator battery.

Monthly Tasks

- Open new data-logger file on time code monitor program on computer in screen room.

Quarterly Tasks (or as required)

- Perform an emergency load test on the generator. This involves simulating a commercial power outage and observing the station system's performance as the generator comes online. Automatic restart functions on the transmitters are checked, as well as the UPS system that carries the screen room equipment. After about 30 minutes, the commercial power is restored and system switchover is observed.

Semi-annual Tasks

- Insert or remove Daylight Saving Time information from the broadcast. At WWV this is a program entry that can be performed days or weeks ahead of the actual event, which occurs the first Sunday in April and the last Sunday in October.
- Perform preventive maintenance on all transmitters: main and standby. This consists of thoroughly cleaning, inspecting, and lubricating each of the 10 active HF transmitters, repairing or replacing any deficient or broken parts, and testing the unit prior to placing it back in service. Meter readings are logged on standby transmitters.
- Perform preventive maintenance on evaporative coolers. This task is normally performed by EMSS from Boulder. In spring, the units are cleaned, bearings are lubricated, filters are replaced and the units are filled with water. In autumn, the units are drained and winterized.
- Perform small engine generator maintenance and testing: these four 3 kW portable generators are used primarily to drive the winch motors when lowering the LF antennas, as well as powering a portable water pump when fighting or controlling grass fires. In either case, they need to be ready at a moment's notice. Maintenance consists of changing or servicing the spark plug, filters, oil, and tires as required, and load testing the generator.
- Perform emergency generator preventive maintenance and repairs. This task is performed by EMSS.
- Perform UPS battery test. This test intentionally loads the battery bank of the UPS system to determine its run time. The test is performed using the user interface.

Annual Tasks

- Replace light bulbs on the 2.5 MHz broadcast antenna beacon and side marker. Performed by contractor annually or as required.
- Inspect and lubricate tower beacon flasher assemblies.
- Perform screen room air conditioning preventive maintenance. This task is performed by EMSS every spring.

Other Tasks (performed as required)

- Interact with users of the broadcasts as required.
- Effect emergency and scheduled repairs as necessary.
- Develop new and replacement hardware and software as directed.
- Insert leap year information into broadcast every four years.
- Insert DUT1 correction into the broadcast when necessary. This can be programmed days or weeks in advance.
- Insert leap second correction into the broadcast prior to the arrival of leap seconds, which occur on June 30th or December 31st.

2. WWVB Task Lists

Daily Tasks

- Check broadcast status. Observe monitoring programs and note any overnight aberrations (slight changes in phase or power levels).
- Check transmitter status at console; log transmitter/antenna configuration, forward and reverse power levels, tune position of each variometer, and wind/weather conditions.
- Log transmitter meter readings for each on-air transmitter.
- Log screen room numbers; each TCG vs. master clock, phase of radiated signal, 10 dB dropout, signal quality, screen room temperature, alarm status, etc.

Weekly Tasks

- Log number of telephone time-of-day calls.
- Exercise emergency generator engine (automated). Generator engine starts and runs 30 minutes while station remains on commercial power.

Bi-weekly Tasks

- Rotate on-line screen room air conditioning units.
- Check electrolyte in generator battery.

Monthly Tasks

- Open new file in data logger program on computer in screen room.

Bi-monthly Tasks (approximately)

- Perform transmitter preventive maintenance. Thoroughly clean, inspect, lubricate and test each LF transmitter, repairing or replacing deficient or broken parts. Each unit of the transmitter has a written maintenance procedure that is followed. The transmitter is then operated into a dummy load at full power for one hour before being placed back in service. This maintenance is performed every 1400 operating hours.

Quarterly Tasks

- Perform an emergency load test on the standby generator. This involves simulating a commercial power outage and observing the station system's performance as the generator comes online. Automatic restart functions of the transmitters are checked, as well as the UPS system that carries the screen room equipment. After 30 minutes, the commercial power is restored and system switchover is observed.

Semi-annual Tasks

- Insert or remove Daylight Saving Time information from the broadcast. At WWVB this must be performed manually on Saturday evening and again on Sunday evening. DST begins the first Sunday in April and ends the last Sunday in October.

- Perform preventive maintenance on the helix house equipment. This involves placing the WWVB broadcast in single mode, and grounding the antenna at the helix house to be inspected. The variometer and matching equipment are cleaned and inspected, the variometer drive mechanism is lubricated, and all connections are checked for tightness. The antenna downlead connection, feed-through insulator, and lightning arc gaps on the roof are also cleaned and inspected. The antenna grounding assembly and the interior of the feed-through insulator are cleaned and inspected as required, using temporary scaffolding erected that day for the purpose. Outside the building, any weeds and underbrush are cleared and herbicide is applied to the gravel area near the building.
- Perform UPS battery test. This test intentionally loads the battery bank of the UPS system to determine its run time.

Annual Tasks

- Change year setting at WWVB Time Code Generators. Must be performed manually on December 31st.
- Perform preventive maintenance on the antenna switch matrix. This involves shutting down the broadcast completely, since all transmitter outputs are fed through the switch matrix. The unit is disassembled to expose the contacts, which are cleaned, inspected and serviced as required. The switch mechanisms are lubricated and adjusted for smooth operation, and the unit is reassembled.
- Perform preventive maintenance on the dummy load. Clean and inspect, tighten connections, and check the resistors. Lubricate the blower motor and bearings as required. Change the blower belt as necessary.
- Perform preventive maintenance on the WWVB time code generators. Involves taking the unit off line, removing it to a bench, and thoroughly cleaning and inspecting all circuit cards and chassis connections. This is particularly important since the units are wired using a wire-wrap method of termination, which is prone to connections loosening with age and use.
- Change light bulbs in 400 foot (122 m) tower beacons and side markers. Inspect fixtures and repair where necessary. Performed annually or as required.
- Inspect and lubricate tower beacon flasher assemblies.

Every Five Years

- Lower north and south antennas; inspect, renew each connection, replace hardware and cabling as required. Broadcast continues in single antenna mode.

Other Tasks (performed as required)

- Interact with users of the broadcasts as required.
- Effect emergency and scheduled repairs as necessary.
- Develop new and replacement hardware and software as directed.
- Insert leap year information into broadcast every four years.

- Insert DUT1 correction into the broadcast when necessary. Must be programmed manually the day before the insertion.
- Insert leap second correction into the broadcast when leap seconds occur. Must be programmed manually the day before the insertion. Leap seconds are inserted December 31st or June 30th.

Monthly Maintenance for WWV/WWVB Site

- Drive around the perimeter of station property (in station four-wheel drive vehicle) to inspect condition of the security fence.

Annual Maintenance for WWV/WWVB Site

- Weed spraying: state law requires landowners to control noxious weeds on their property. A contractor performs this function at the stations.
- During the summer months, long grass in the antenna fields and other areas can cause a fire hazard. To alleviate this, the dead grass from the previous season is burned off of sections of the property every spring. This also helps prevent the spread of weeds. Firebreaks are cut using a tractor and disc harrow, and a water trailer with pump is used to control the blaze.

3. WWVH Task Lists

Daily Tasks

- Transmitter Room
    - Station logbook
        - Log overnight events (outages and alarms) captured on PC datalogger and alarm panel since the last workday.
        - Log mission related events of the day.
    - Transmitter logbook
        - Log all transmitter meter readings.
        - Log nitrogen tank pressure (regulated/unregulated) for all heliax cables to antennas.
        - Log water level of reservoir for vapor-phase cooled transmitter.
    - Check modulation of all active transmitters on oscilloscope.
    - Check operation of strip chart recorders, PC datal logger, and power monitoring unit.

- Screen Rooms
    - Screen room logbook
        - Log meter readings of cesium, room temperature, time intervals of TCG 1 pps, and power supplies.
        - Log status of TCG announcement, message system, and UPS.

        - Check operation of IRIG-H datalogger, strip chart recorder, ACTS, FMAS, and 2 kHz alarm.
    - Time and frequency logbook
        - Log common-view GPS data and results between WWVH and Boulder.
        - Log and analyze downloaded data of 1 pps readings from microprocessor-controlled time interval counter datalogger.
        - Log and perform steering corrections of all TCG units.
    - Security logbook
        - View and log activity recorded on (time-lapse) video surveillance system.
    - Visually inspect all backup batteries.
    - Track movement of Pacific hurricanes (June to November) on map.

- Generator Room
    - Generator room logbook
        - Log generator/transfer switch meter readings.
        - Log main and daytank fuel readings.
        - Log observation of fuel tanks for leaks.
        - Log amount of rain water drained from secondary containment tank.
        - Log water meter reading and report high water consumption.
        - Check National Weather Service (NWS) weather radio receiver for quality of KBA-99 broadcast and report problem to NWS, Lihue, Hawaii.
        - Visually inspect batteries (primary/standby for 450 kW generator and cesium standards).

- Antenna Field
        - Perform ground inspection of antenna structure, guy anchors, corral safety fencing, and surrounding areas.
        - Log unusual observations and take corrective action if critical.

- At end of work day, visually verify all transmitter and screen room readings

Weekly Tasks

- Screen room
        - Cut off strip chart paper and log phase comparisons in time and frequency logbook.
        - Alternate online air conditioner units.
        - Download and archive (amplitude and phase) data from WWVB receiver and base water pressure.
- Transmitter room

    - Test and log (clamp-on ampmeter) high/low readings of tower beacons, climb and replace as necessary.

- Generator Room
    - Exercise Kohler generator for 30 minutes with no load.
    - Log engine/generator meter readings while they are running.

- Air conditioning logbook
    - Log runtime meter readings of all air conditioner units.

- Hazardous Materials (hazmat) Log inspection
    - Lockers are orderly and no leaky containers.
    - Only authorized PMRF hazmat products are stored in the lockers.

Bi-weekly Tasks

- AC maintenance
    - Wash air conditioning cooling fins on all ground and rooftop units.
    - Check plumbing drain pipes are clear of debris.
    - Wash down area.
- Antenna Field
    - Closer inspection of antenna, fence structures and foliage.
    - Log and take corrective actions.

Monthly Tasks

- Frequency standards logbook
    - Log all meter readings of cesium and rubidium standards.
- Vehicle check
    - Check fluid levels (oil, coolant, power steering, brake, washer, etc.).
    - Perform corrosion maintenance.
    - Perform battery inspection and charging, peak charge idle batteries.
    - Operate trucks if not in used during the month, take on mail run.
- Antenna Field, Property Inspection and Repair
    - Check antenna hardware, corral and perimeter fencing, posted warning signs.
    - Control weeds in corral and around guy blocks.
    - Lubricate fence hardware.
    - Ensure that anti-climb skirts around towers are secured and clear of bird nests.
    - Mow antenna road, as necessary, limit maximum height of weeds to 6 in.
    - Spot clear antenna field of larger plants and shrubs around hardware.
    - Repair property fencing if necessary.

- Standby Generator
    - Check all fluid levels.
    - Check condition of fan belt, strobe light and battery electrolyte levels.
    - Clean out debris from secondary containment tank.
    - Test day tank fuel alarm.
    - Wipe off dirt and salt accumulation on engine/generator.
- Sprinkler system
    - Ensure valves and heads are functioning properly.

Bi-monthly Tasks

- Service all transmitters as described in WWV procedures.
- Test security/equipment alarms
    - Contact PMRF security office and manually trigger alarms.
    - Test portable (gasoline) generators with load (voltage and frequency).
    - Mow antenna field as necessary, 12 in maximum height of foliage.

Quarterly Tasks

- Generator Room
    - Test Kohler 450 kW generator with station load by disconnecting commercial power.
    - Log engine/generator meter readings to generator logbook.
    - Service air conditioner filters.
    - Start all portable gasoline equipment not used during the previous quarter.
    - Verify with PMRF inventory of all hazardous materials in lockers.

Semi-annual Tasks

- Perform DST changes.
- Perform generator maintenance (EMSS contractor)
- Perform battery maintenance.
    - Load test all backup batteries and log performance, including all UPS.
    - Swap battery in security/equipment alarms at PMRF security office.
- Climb antenna towers to inspect corrosion and repair if necessary.

Annual Tasks

- Climb antenna towers to inspect corrosion (repair if necessary) and replace beacon lamps.
- Replace all power tube sockets in main transmitters.
- Replace gasoline in portable engines (old gasoline filtered and recycle in station vehicle).

Bi-annual Tasks

- Climb and paint antennas orange and white.

Other Tasks (performed as required)

- Insert leap year, leap second, and DUT1 information as described in WWV task list.

D. Repairs and Service of Equipment

Repairs and service performed at the WWV/WWVB site can be divided into two categories, facilities and mission specific. Facilities are defined as structures or components that are part of the buildings or physical infrastructure of the radio stations. Facilities upgrades, repairs and service are usually funded by EMSS or another entity in Boulder.

Mission specific items are part of the broadcast system, such as transmitters or cesium standards. These items are supported using division funding.

1. Facility Service and Repairs at WWV and WWVB

EMSS is responsible for maintenance of the buildings and structures. Major upgrades and renovations are headed by a project engineer working with a technical representative, usually with a member of the station staff as a point of contact. Numerous upgrades have been performed in recent years, including electrical upgrades, roof repairs, and air conditioning and heating improvements.

Emergency standby generators are serviced semi-annually and repaired as required. The work is performed by a contractor and directed by EMSS. The heating, ventilating, and cooling systems are serviced and maintained annually or as required. The screen room systems are the most important. Other units serviced include the transmitter building evaporative coolers and the office and lab area heat pumps. This servicing is usually performed by EMSS technicians. Minor adjustments or service is performed by station staff, especially when it directly affects the broadcast operations.

The electrical systems maintenance includes service and maintenance to the UPS systems and surge suppressors, and repairs to electrical distribution equipment as required. This work is performed by contractors and EMSS personnel. Minor or emergency repairs may be performed by station staff members. Plumbing systems are also maintained by EMSS personnel.

It is important to note that in an emergency situation, station staff members will often make repairs or adjustments necessary to maintain the broadcast.

2. Facility Service and Repairs at WWVH

Repairs and service at the WWVH facilities depend much more on station personnel, due to the remote location of the station. Many of the items mentioned above as performed by support personnel at WWV and WWVB are performed by station staff at WWVH, or by Naval base

support personnel. Major project and upgrades are usually funded by EMSS, and performed by local contractors. Still, logistics require a greater level of involvement for station staff even in these instances.

3. Mission Specific Service and Repairs at the Radio Stations

Maintenance, service, and repairs to mission specific items are performed by station personnel, or contractors as required. Many of these items have been discussed in Section A. Typically, troubleshooting, testing, and repair of broadcast equipment are handled at the technician level.

A typical scenario would be that a technician observes a problem with a broadcast transmitter, either by an alarm or by observation of the equipment. The immediate impact on the service is addressed; for instance, if a transmitter was off the air due to a malfunction, a standby unit would be brought up as soon as possible to resume the service (most transmitters have automatic backup systems). The defective transmitter would be connected to a dummy load if necessary, and troubleshooting techniques employed to isolate the problem to the lowest level possible. The defective component would then be repaired or replaced, and the transmitter placed back in service. One or more technicians could be working on a transmitter in a scenario like this. For safety reasons, testing or troubleshooting involving high voltage measurements requires at least two technicians.

The stations are equipped with adequate test equipment and tools for troubleshooting the broadcast equipment, including oscilloscopes, spectrum analyzers, a vector impedance meter, and a frequency selective voltmeter. Each station has a laboratory and auxiliary screen room for working on equipment.

4. Spare Parts

The stations stock an extensive inventory of spare parts, both new and used. In addition, NIST has access to parts support from the U.S. Navy's LF Support Facility, which carries a complete inventory for the LF transmitters, as well as other broadcast equipment. Spare parts for items that are unique to the NIST installations have been stocked at the radio stations. A machine shop including welding, sheet metal, and other metalworking equipment is available on site for fabrication of parts or components when required.

5. Ongoing Tasks

In addition to the maintenance and repair duties, station staff are tasked with other projects related to improving the stations' reliability and performance, and its value to the users. These include designing, building, and testing new or replacement circuits, equipment, and parts, and writing software to control them. Much of the equipment and software used in the operation of the stations were designed and built or written by station personnel. The telephone time of day system and the official announcement voice storage systems at WWVH, and the broadcast alarm and paging system at WWV and WWVB are examples. The Time and Frequency Division's Engineering Support Group in Boulder also assists in developing hardware for the stations; this group recently built new modulators for some of the WWV transmitters, and is working to develop replacements for other time and frequency generation equipment.

Interacting with users of the broadcasts is another ongoing task. All station staff members are required to handle inquiries about the broadcasts from users, by telephone, email or postal mail.

E. Failure Modes

1. WWV/WWVH Failure Modes

WWV and WWVH can fail due to a timing failure or a broadcast failure as described below.

a) Timing Failures

The time and frequency generation systems at WWV and WWVH are monitored by screen room controllers, described in Chapter 2. These units monitor the outputs of the three systems continuously, and conduct a "majority vote" of the systems. When an individual system rack experiences a failure, due to a problem in one of its components (frequency standard, TCG, or distribution gear), the controller transfers that rack offline. If the failed rack was the site master clock, the standby rack outputs are connected to the transmitters and becomes the site master clock. If the failed rack was the designated standby rack, it is taken offline. In either case, the failed rack's outputs are no longer considered in the majority vote calculations. When a rack failure occurs, a rack transfer alarm is sent. The alarm systems outlined in Chapter 2 are activated; if the failure occurs during normal working hours, personnel will be on hand to address the situation in a matter of minutes. If the failure occurs during non-working hours, personnel respond as soon as is practical.

Although a rack transfer event is a system failure, the station is still on the air due to the redundant configuration. Two racks (a majority) are still in service. If, in this situation, another rack were to fail, the screen room controller disconnects all inputs to the transmitters, and the station is off the air. A failure in the screen room controller could also cause a station outage.

b) Broadcast Failures

Broadcast outages at WWV and WWVH can occur at several levels. Since these stations broadcast on four or five frequencies, respectively, using separate transmitters, an outage can occur with an equipment failure at one of the main or standby transmitters, which would affect one frequency. A commercial power outage or generator failure could also cause a station-wide outage.

Some types of equipment problems can cause overload conditions in a transmitter. These conditions are often temporary, and have many causes such as a power fluctuation or a lightning strike, or a temporary fault within the equipment. The transmitters are equipped with automatic overload recycling circuits that will reset an overload up to six times. Overload resets typically activate in less than four seconds; that frequency's broadcast is off the air for that period. Should the overload reset hold, the transmitter resumes normal operation. After the sixth reset, a lockout is enabled and the transmitter's high voltage power supplies are disabled until the equipment can be repaired.

When a broadcast or transmitter outage occurs, an automatic backup system (described in Chapter 2) is enabled. A microprocessor circuit monitors RF current samples from each main transmitter. When the circuit senses a loss of signal level from a transmitter, a routine is initiated whereby after a delay to allow for overload recycling, a standby transmitter is brought online automatically. The time from outage to standby on-line is less than two minutes. The effective radiated power of the standby transmitters is less than that of the main transmitters. Should the standby transmitter experience a failure, that frequency is off the air; an alarm is sent notifying personnel of the problem. During non-duty hours, a responder can usually be at the station within 30 to 45 minutes.

In the event of a commercial power outage, the emergency standby generator automatically starts and transfers the station load. Restart circuitry in each transmitter activates, and the transmitters come back on-line in less than two minutes. After commercial power is restored, the generator continues to carry the load for 30 minutes before automatically transferring back to commercial power.

c) Other Equipment Failure Modes

Other equipment failures can affect the WWV/WWVH broadcasts. The screen room air conditioning systems are redundant; if the on-line unit fails, the standby unit is brought online. If the standby unit fails, excessive heat can disrupt the outputs of the time and frequency generation systems. In this case, the screen room temperature alarms located at both stations alert staff of the problem.

The standby generator could fail to start after a commercial power outage. This would cause a transmitter alarm, since they would be off the air. The alarm systems are powered by UPS units. These units are sized to keep power to the time and frequency generation systems and other screen room equipment for at least 2 hours after an outage. The WWVH frequency standards have a separate battery backup system that can power the oscillators for 24 hours.

The WWV and WWVH coaxial transmission lines from the transmitters to the antennas are pressurized to prevent moisture from entering. Lines at WWV are rigid and pressurized using a dehydrated air system, and are run above ground. The flexible transmission lines at WWVH are buried, but come to the surface at the antenna base. They are pressurized with a nitrogen gas system. In either case, leaks can allow moisture to enter the lines, causing the active center conductor to short to the grounded outer conductor. This would cause an outage on that antenna until the problem is fixed. The WWV systems are much more susceptible to leaks since the rigid lines are made up of sections about 5 m long, and have many more connections than the continuous runs of flexible line at WWVH. A failure of the dehydrator system at WWV could cause failures of multiple frequencies.

The flexible WWVB transmission lines are buried in a concrete-lined trench, except for short distances above ground at the helix house and transmitter building. They are charged with dehydrated air. Two dehydrators are in service at WWVB; one is designated as primary and the other as a standby. Line pressure is monitored by an alarm; station personnel are notified if the pressure drops below a set point, either by a leak or by dehydrator failure.

2. WWVB Failure Modes

The WWVB broadcast consists of one frequency, 60 kHz, normally carried by two transmitters operating simultaneously into separate antennas.

a) Timing Failures

WWVB timing uses two of the cesium frequency standards located at WWV (see Figure 2.4). The frequency outputs are monitored by the WWVB screen room controller, and is not affected by the actions of the WWV controller. The frequency standard outputs are fed to the WWVB screen room via buried cables run between the buildings. The timing equipment is monitored by a screen room controller that compares each of the four time code generators for accuracy. Should a failure occur in one of the units, another is automatically placed on-line. If another failure occurs, the entire system is shut down.

b) Broadcast Failures

As with WWV and WWVH, in the event of a transmitter failure, overload recycling circuits are enabled. After three recycle attempts, the overload locks out until the problem can be investigated. Current sensors in each helix house detect a loss of signal level, and the screen room controller sends an alarm signal as described earlier. Once a staff member has responded, the situation is analyzed. If the problem with the transmitter cannot be corrected quickly, a standby transmitter is brought on-line and placed on the air, allowing resumption of the broadcast. There is no automatic backup transmitter in the WWVB broadcast system.

Each antenna system at WWVB is suspended from four towers; the antennas are designed to float between the towers, and are subject to movement due to wind. The autotuning circuit has been designed to handle the change in tuning that occurs during windy conditions; however, sudden gusts can move the antenna too rapidly for the autotuning system to respond. This results in an excessive reflected power level, which can damage the transmitters. The level of reflected power to the transmitters in monitored by a carrier cutoff (CCO) circuit; if the level exceeds a setpoint, the drive to the transmitters is disconnected for several seconds to allow the wind gusts to subside. The CCO makes three attempts to restore the drive to the transmitter; if a CCO event occurs after the third attempt, the drive is shut down and the station is off the air until reset by station personnel.

The screen room controller at WWVB was designed for an earlier transmitter system. The controller is programmed to disconnect the outputs of the TCGs if the transmitters are off the air for more than about 90 seconds. If any of the above conditions persists for more than 90 seconds, the station is taken off the air.

The WWVB broadcast system is made up of two separate antennas connected to separate transmitters. Normal operation involves both antennas operated simultaneously, and is known as dual operation. Should a problem occur with one of the antennas or antenna matching equipment, the other antenna can be manually placed in service in single mode. The effective radiated power in single mode is 28 kW.

c) Other Equipment Failure Modes

In the event of a commercial power outage, the emergency standby generator starts and transfers the building load within one minute. Restart circuitry in each active transmitter brings the units back on line automatically. After commercial power is restored, the generator continues to carry the load for 30 minutes before automatically transferring back to commercial power.

The screen room air conditioners could fail, leading to disruption of the outputs of the time code generators.

F. Quality Control of Broadcast Information

The ultimate goal for all NIST radio stations is for the broadcast to always be available, and for the information contained in the broadcast (standard time and frequency) to always be correct. This section focuses on the quality control of the broadcast information, by looking at how the broadcast time and frequency information is controlled at each station.

1. Timing Control

The timing of the radio stations is compared to UTC(NIST) using the GPS common view technique. A common view comparison against UTC(NIST) is performed every working day, and the stations' offset is recorded.

The time signal broadcast by the NIST radio stations is derived from the frequency standards in place at each site. However, the time code generators can drift slightly independent of their frequency standards. Adjustments to the outputs of the time code generators are occasionally needed, and are entered manually as required. Corrections are typically in the hundreds of nanoseconds range.

Daily record keeping, described below, is used to monitor the long-term accuracy of the time code generators as compared with each other, the outputs of the three frequency standards, and UTC(NIST). The outputs are kept within 1 μs of UTC(NIST) as described in Chapter 5.

Periodic adjustments are made to the radio station broadcasts as directed by the International Earth Rotation and Reference System Service (IERS). The following occur as directed by the IERS:

- Insert DUT1 correction into the broadcast. This can be entered days or weeks in advance in the WWV and WWVH TCGs, but must be programmed manually the day before insertion at WWVB.

- Insert leap second correction into the broadcast. The same entry criteria as above apply here. When required, leap seconds are inserted on December 31st or June 30th.

- Although it does not affect the timing of the radio stations, Daylight Saving Time information is entered in the broadcast twice yearly (contained in the time code).

2. Frequency Control

The frequencies broadcast by the radio stations are derived from the frequency standards at each site. The outputs of the three standards are each monitored by comparing their outputs with each other, and UTC(NIST). At WWV/WWVB, this is accomplished with daily comparisons with UTC(NIST) via the GPS common view technique, and by manual twice-daily readings using a time-interval counter. The frequency standards are connected to the FMAS system, which also monitors the standards. At WWVH, the above routines are performed, but the outputs of the frequency standards are also monitored using phase-error detection systems. The phase of the frequency standards' outputs is tracked using a strip chart recorder. The data from the recorder are downloaded via a data connection to a computer, where they are archived. Frequency is controlled to within a few parts in 10^{13} as described in Chapter 5. Corrections are entered manually.

G. Recordkeeping

1. Operational Recordkeeping

The operating condition of the transmitters is monitored closely. Transmitter meter readings are taken daily; these records provide a tool for observing long term trends or short term aberrations in performance. The output waveform of each on-line transmitter is checked daily with an oscilloscope for fidelity. Each station has datalogging devices that are interrogated daily for problems during non-duty hours.

The status of the time and frequency generation systems at the radio stations is logged manually every working day. These records compare each frequency standard and time code generator against other units in the system and UTC(NIST). These paper records are filed at the stations, or entered and saved as computer files. The frequency stability of the frequency standards are logged by the FMAS system, and at WWVH, with a strip chart recording system. The FMAS continuously measures and reports the health of the different oscillators (up to five oscillators can be connected). The strip chart recorder at WWVH is connected to a computer that downloads the data in text form for archiving. The paper strip charts are also stored.

The actual time code of the signals broadcast by the stations is recorded as it is being generated. A data logger circuit built by NIST personnel accepts a DCLS output from the on-line time code generator and displays and records the actual code in one minute frames. These data are also archived. Figure 3.1 shows a segment of the WWVH time code as recorded by the data logger. Each station is equipped with a time code data logger.

The phase and amplitude of the WWVB signal are recorded as received at WWVH in Hawaii. As of this writing, the WWVB broadcast is also being monitored by a calibrated receiver at the Boulder labs that is connected to a computer that logs the signal strength of the broadcast. This system also provides a record of WWVB broadcast outages. Outages of more than five minutes are reported on the Time and Frequency division website. After a final design has been proven, plans call for receivers to be installed at various locations around the country, so that the field strength can be monitored at distances further away from the station.

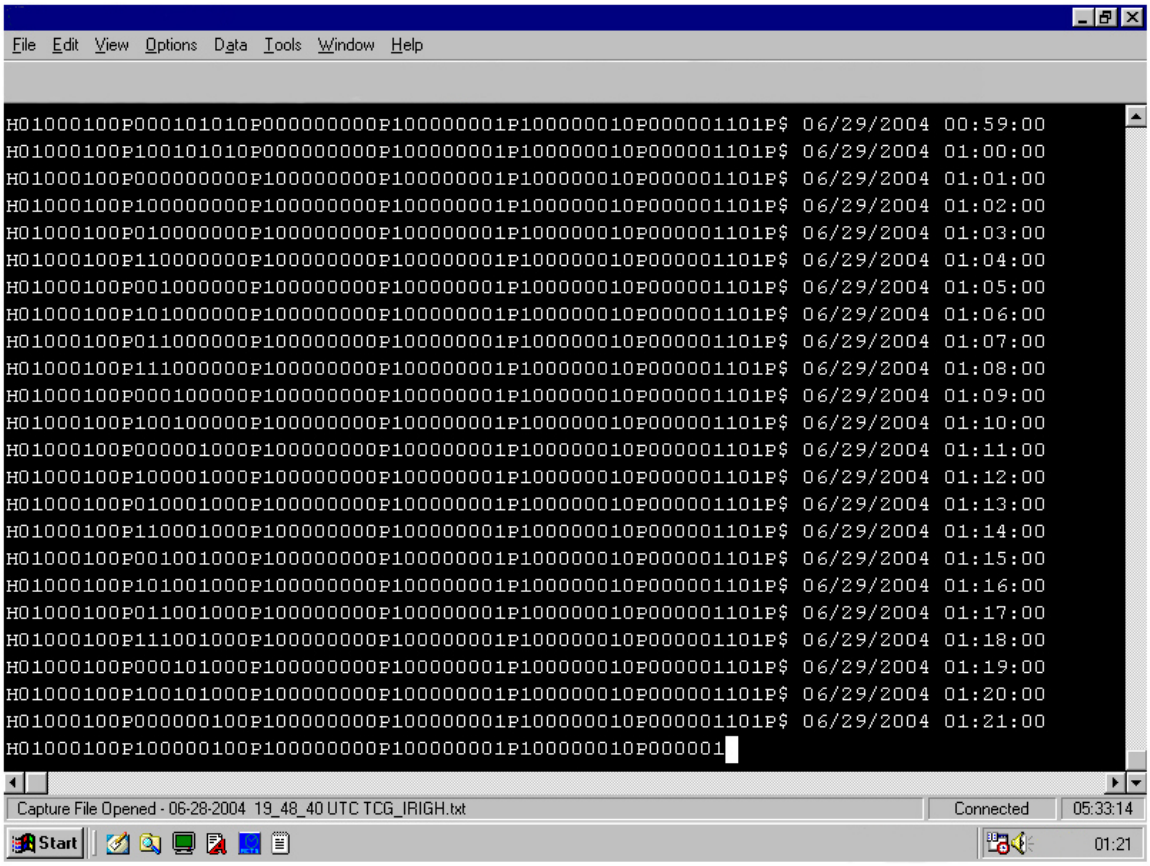

Figure 3.1. Screen display from WWVH time code data logger.

The operational status of the transmitters is monitored by software that works in conjunction with the alarm circuits described in Chapter 2. The monitoring shows which transmitters are operating, when they fail, and for how long. These data are reviewed daily and archived at the stations. The temperature of the screen rooms is also logged.

The status of the telephone time of day services, and the number of callers is also logged manually on a weekly basis. The status of the incoming electric power is logged by commercially available monitoring systems that are controlled from a computer. These systems store their data for at least three months.

2. Equipment Records

Operating conditions of the various broadcast equipment are monitored and logged at the radio stations. Daily or weekly meter readings are taken at the transmitters, and maintenance logs are kept of all problems observed and repairs made. Logs are also maintained for screen room equipment, antennas and antenna matching equipment, generators, and screen room air conditioning systems.

The purchase of power amplifier tubes is a significant part of the station's budget. These tubes are expendable items. As part of the equipment logs, extensive documentation is kept on the power amplifier and modulator tubes for the transmitters. Manufacturer, serial number, and date of purchase information are logged upon receipt of the tube. Many tubes can be used in more than one type of transmitter; for example, modulator tubes used in WWV's CCA transmitters can also be used as a final power amplifier tube in the TMC transmitters. The operating position of each tube is logged, and the number of hours it serves in that location; the tube's operating characteristics can be tracked using the transmitter log sheets. In this way, the maximum useful life can be extracted from each tube. When a tube is spent, it is sometimes returned to the manufacturer to be rebuilt.

3. Other Records

Station logs are kept at each NIST radio station that record the daily and weekly activities of the staff members, and the status of various tasks they are working on. These logs are kept by the station engineer in charge. Logs of official correspondence with users of the broadcasts, such as QSL cards, are kept at the stations. E-mail correspondence is also saved and backed up periodically.

4. Software

Most of the software running at the radio stations is used in monitoring and data logging programs. Some of the software is proprietary; such as the software used with the electric power monitoring equipment, other software has been developed by station staff for particular logging functions, such as the time code data logger program. Copies of these programs are kept at the stations.

The WWVB broadcast, with its autotuning and complicated interlock configurations, is controlled by a programmable logic controller (PLC). This commercially available device is installed in the control console; several copies of the program are stored at the stations. In addition, a complete replacement PLC with the program already loaded is kept in the spare parts inventory. Each transmitter contains a local control panel, made specifically for the WWVB installation. These panels are microprocessor controlled; if the microprocessor circuit is replaced, the program can be loaded using copies kept at the station. A laptop computer with a serial port is used to load software to the PLC and local control panel.

5. Data Backup Procedures

Data and software backups are performed periodically at the radio stations. As mentioned above, copies of software used for station processes or monitoring functions are kept on disks in a safe at the stations. Data collected by the various monitoring programs are backed up periodically to CD-R or DVD-R media and stored at the stations.

H. Physical Security

This section describes a few of the key features of the physical security system for the radio stations. However, the actual security procedures followed by NIST personnel are proprietary to the United States government and are not disclosed here. Access to the stations is restricted, and off limits to the general public.

1. Physical Security of WWV and WWVB

The radio station site covers about 390 acres (158 hectares), just north of Colorado Highway 1. The station property is accessed through a manually operated gate near the highway, which is kept locked during non-duty hours.

A chain link fence topped with barbed wire has been installed on the perimeter of most of the property; a portion of the south end of the property remains outside the fence. A motorized gate is installed where the fence line crosses the entrance road, about 1.5 km from the highway. The gate is controllable from the building. Video surveillance equipment allows unrestricted views of the gate area from inside the building. The gate is also controlled by a keypad mounted on a pedestal outside the fence line. Motorists approaching the gate can reach the keypad from their vehicle. A telephone is also mounted near the keypad to allow authorized visitors to ring station personnel for entry.

The main buildings are wired with a security system monitored by a local security company. The company monitors burglar and fire alarms.

2. Physical Security of WWVH

The WWVH site is located on an active U.S. Navy facility. Naval security personnel control all access to the base and provide 24 hour security for the station. The WWVH building interior and grounds are monitored by NIST security cameras that record any activity occurring after hours. Burglar and fire alarm systems in the building are connected to the Navy security office on the base.

Chapter 4

Customers

This section provides a detailed look at the customers of the NIST time and frequency broadcast stations. It discusses the number and type of customers, the signal coverage area, and how NIST interacts with and supports its customer base. The discussion focuses on United States customers, although the broadcasts are often used outside the United States.

A. Estimated Number of Customers

It is difficult to accurately estimate how many customers use the NIST time and frequency radio services, since after the signals leave NIST, they can potentially be received by a nearly infinite number of receivers within the coverage area (section 4.B). NIST receives feedback from only a tiny fraction of these customers, so estimates of the number of receivers in use must be obtained from other sources. This section provides rough estimates for the number of radio users, and definitive data for the telephone time-of-day service.

1. Estimated Number of Customers for WWV/WWVH

WWV and WWVH can potentially be received by anyone possessing a shortwave radio (sometimes called a world band receiver, or a communications receiver). A general coverage shortwave radio covers the spectrum from 530 kHz, the bottom of the commercial AM broadcast band, to 30 MHz. All of the frequencies broadcast by both WWV and WWVH fall within this range. Some lower cost shortwave radios receive only the frequencies most commonly used for international broadcasts, typically from about 4 to 12 MHz. These radios can still receive WWV and WWVH on 5 and 10 MHz.

Although shortwave radio is a primary means of communication in other countries, it is estimated from surveys conducted by the Voice of America (VOA) and the British Broadcast Corporation (BBC) that no more than 1 % of the United States population listens to shortwave radio during a given week [45]. While this means that the potential combined audience for WWV and WWVH is probably less than 3 million (based on a population of 281.4 million from the year 2000 census), this is still a very substantial figure. It is a safe assumption that most shortwave listeners are aware of the presence of WWV and/or WWVH, since they are among the easiest shortwave stations to receive in the United States, and since they occupy easy-to-remember dial locations (5, 10, and 15 MHz). Anyone with a shortwave radio is likely to “stumble across” one of the broadcasts. Perhaps surprisingly, informal research conducted by the international broadcasters and sales figures provided by shortwave receiver manufacturers show that the size of the shortwave listening audience has been increasing since about 1990, even in the United States.

The group of shortwave listeners probably includes nearly all of the technically savvy amateur radio community, a group that is highly likely to know about and use the NIST radio

broadcasts. According to Federal Communications Commission (FCC) licensing data, there were about 685,000 licensed radio amateurs in the United States as of October 2002 (a five-year high). While many of these amateurs operate in bands outside the HF band, most own HF receiving equipment, and they are avid listeners, users, and supporters of the broadcasts.

There are also indirect customers of WWV who use time code displays, or telephone services referenced to WWV, without ever actually listening to the station. More information about these applications can be found in Chapter IV.C. Based on the information presented here, we feel that the number of people who at least occasionally use the services of WWV and/or WWVH in the United States easily numbers over 1 million.

2. Estimated Number of Customers for WWVB

It is probably true that WWVB has more customers than any NIST service, with the possible exception of the NIST Internet Time Service [36]. It is also true that most WWVB customers are unaware that they are customers at all. They own or use WWVB controlled clocks or watches that automatically synchronize to the time code without any customer interaction.

How many WWVB radio-controlled clocks are in operation? NIST has no access to precise sales figures, but it is believed that the number now exceeds several million, and that sales should continue to increase for years to come. Several timepiece manufacturers have projected that sales of radio-controlled clocks exceeded 10 million units in 2003, with at least 10 % of these units sold to the United States marketplace for WWVB reception. The United States marketplace is expected to grow rapidly. Rough estimates list the number of clocks sold per year in the United States to be about 100 million, and the number of watches sold to be about 50 million. It seems quite reasonable to expect that more than 5 % of the clocks and watches sold in the U.S. could be radio controlled by WWVB by 2008, meaning that annual sales could reach or exceed 10 million units [46].

WWVB clocks are found in homes, schools, public buildings, and businesses across the United States. The availability of WWVB products continues to go up, and the prices continue to go down. Public awareness of the fact that you can purchase a low cost clock that always displays the correct time also continues to go up. At this writing (2004), wall clocks are available in major U.S. department stores for as little as $10, and wrist watches for as little as $20. The first products sold in the United States came primarily from Europe, modified versions of products designed to receive signals from station DCF77 in Mainflingen, Germany on 77.5 kHz, or from the British station MSF on 60 kHz. Today, however, many products are designed specifically for the United States marketplace, and others are truly international products, capable of working with one or more stations. Many products now work with more than one or all of the available stations: WWVB, DCF77, MSF, and both the 40 and 60 kHz broadcasts from station JJY in Japan. Although each of these stations broadcasts time in a different format, the trend of designing products to be compatible with several stations is expected to continue. This makes it possible for companies to make the same product available internationally, and increase the number of units sold.

3. Estimated Number of Customers for the Telephone Time-of-Day Service

The telephone time-of-day service provides an audio simulcast of the WWV broadcast to callers who dial 303-499-7111, a long distance call outside the 303 area code (Denver-Boulder, Colorado area). This service began in July 1971, and at its peak in the 1980's received more than 5,000 telephone calls per day on average, a total of nearly 2 million per year. The number has diminished in recent years, probably due to the fact that many new time references have become available, including low-cost radio-controlled clocks, and the various computer time services offered by NIST [36] and other organizations. However, over 900,000 calls were received yearly in both 2001 and 2002 for the WWV simulcast, and about 40,000 for the WWVH simulcast that is available by dialing 808-335-4363, a long distance call outside of Hawaii.

Figure 4.1 shows the total number of calls received in 2002 at WWV. The two peaks on the graph are for the weeks containing the transition days for standard time to daylight saving time (and vice versa), when many people call to reset their clocks after making the one-hour adjustment.

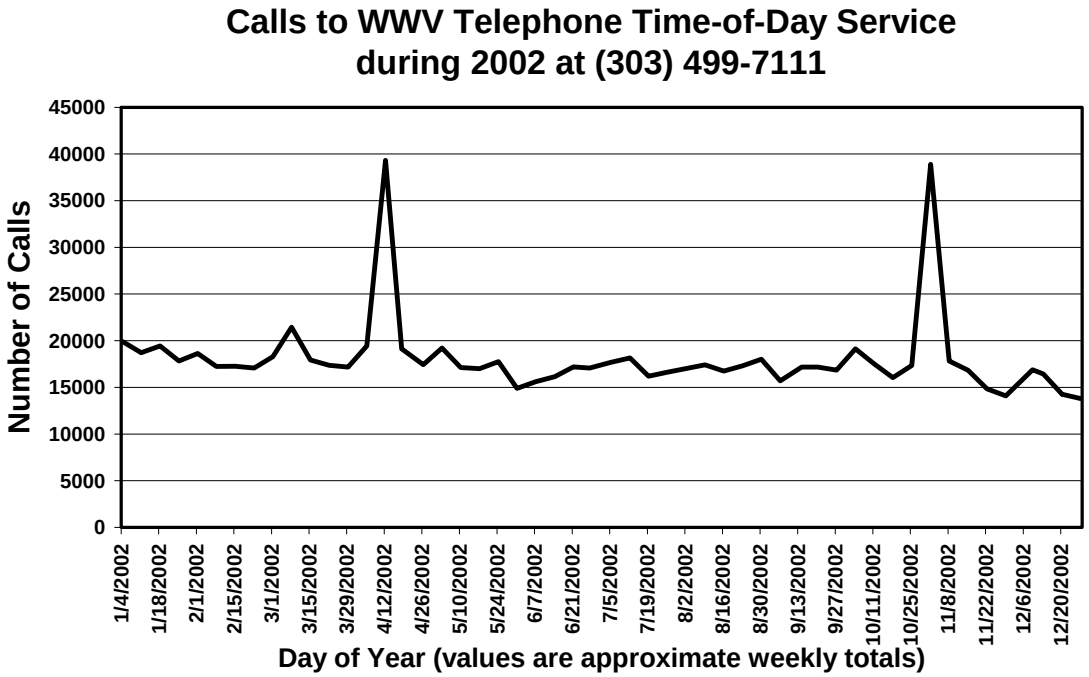

Figure 4.1. Calls to WWV Telephone Time-of-Day Service during 2002.

B. Coverage Area for Radio Broadcasts

As the national metrology laboratory, NIST's goal for its radio stations is to make the signals available to essentially all United States citizens. This section discusses the coverage area of all three NIST radio stations.

1. Coverage Area for WWV

Prior to WWV's move to Colorado in 1966, a propagation study was conducted to predict the coverage area of the signal at both 100 kW and 10 kW of radiated power [34]. It was determined to use 10 kW on the station's most widely used frequencies (5, 10, and 15 MHz). This projection was made for the summer months during periods of high solar activity, averaging daytime and night time propagation, and based on a receiver with a noise figure of 10 dB or less. During these far less than optimal conditions, the study showed that 10 kW was enough power to reliably cover essentially all of the United States.

While the 1960's study provided a rough estimate of the reliable range of WWV, the nearly countless variables that affect HF propagation and the varying quality of receiving equipment, make it impossible to determine the true range of the signal. It is clear that the WWV signal has been heard by many outside the predicted coverage area, and that under optimal conditions the coverage is essentially worldwide.

Like many radio stations, WWV sends out QSL cards (a telegrapher's abbreviation for confirmation) to listeners who send in reports documenting reception. About 30,000 QSL cards have been sent since the station went on the air in Colorado in 1966 through the end of 2002. The WWV staff has received reception reports from as far away as the South Pole, and reports from Europe, Asia, and Australia are common. Although the practice of requesting QSL cards has diminished in recent years, the station still receives a number of requests. Table 4.1 provides a summary of countries where reception of WWV has been verified by a QSL card during 2001 and 2002.

Table 4.1. Countries verifying WWV reception in 2001 and 2002.

Broadcast frequency (MHz)	**Countries outside the United States where reception has been verified (listed alphabetically)**
2.5	Peru
5	Brazil, Canada, Italy, Peru, United Kingdom
10	Australia, Brazil, Canada, Cuba, Finland, Germany, Italy, Japan, Mexico, Sweden, United Kingdom, Uzbekistan, West Indies
15	Argentina, Australia, Belarus, Brazil, Costa Rica, Finland, France, Germany, Hungary, India, Indonesia, Italy, Japan, Latvia, Lithuania, Mexico, Netherlands, Nigeria, Poland, Spain, United Kingdom, Ukraine
20	Mexico, Peru

Another variable affecting WWV coverage is interference from other stations. Both WWV and WWVH use frequencies internationally allocated for standard time and frequency broadcasts, and these same frequencies are used by stations in other countries (although in some cases, the foreign stations do not broadcast 24 hours per day). Table 4.2 provides a list of stations that currently share frequencies with WWV and WWVH. Since WWV and WWVH share the same frequencies (with the exception of 20 MHz, which is exclusive to WWV), care was taken so that the voice announcements on each station are made when the other station is silent. It is sometimes possible to hear both stations, with the male voice identifying WWV, and the female voice identifying WWVH.

Table 4.2. Time and frequency stations that share the WWV/WWVH carrier frequencies.

Call sign	Country	Shared frequencies (MHz)	Always on?	Language
BPM	China	2.5, 5, 10, 15	Yes (5 and 10 MHz only)	Chinese
BSF	Taiwan	5, 15	Yes	No voice
HD2IOA	Ecuador	5	No	Spanish
HLA	Korea	5	Yes	Korean
LOL	Argentina	5, 10, 15	No	Spanish
WWV	United States	2.5, 5, 10, 15, 20	Yes	English
WWVH	United States	2.5, 5, 10, 15	Yes	English
YVTO	Venezuela	5	Yes	Spanish

The High Frequency Active Auroral Research Program (HAARP) continuously monitors the 15 and 20 MHz broadcasts from their facility in Gakona, Alaska and displays the results in near real-time on their web site (http://www.haarp.alaska.edu). The graphs on the HAARP web site show the received signal level (Figure 4.2). The 15 MHz chart shown in the figure (from March 1, 2003) shows the sum of the signal powers from WWV and WWVH (both broadcasting 10 kW at 15 MHz), as well as the predicted signal level. The power level shown on the 20 MHz chart is understandably lower, since only WWV uses this frequency and the radiated output power is lower at 2.5 kW.

2. Coverage Area for WWVH

The principal coverage area for WWVH is the parts of the United States not reliably covered by WWV, primarily the states of Hawaii and Alaska. Prior to the station's move to Kauai in 1971, a computer study was performed showing that the directional antennas of the station would project a cardioid pattern of radio illumination which will cover Alaska to the North, New Zealand to the South, and reach the major cities of Saigon, Singapore, Hong Kong and Calcutta. The study showed that WWVH signals would have reception reliability at these key cities of from 90 % to 99 % during the hours between 0600 and 1600 UTC, and only slightly less reliability during other hours [23]. Like WWV, the station sends out QSL cards to confirm reception, and reports have been received from as far away as South Africa, a distance of

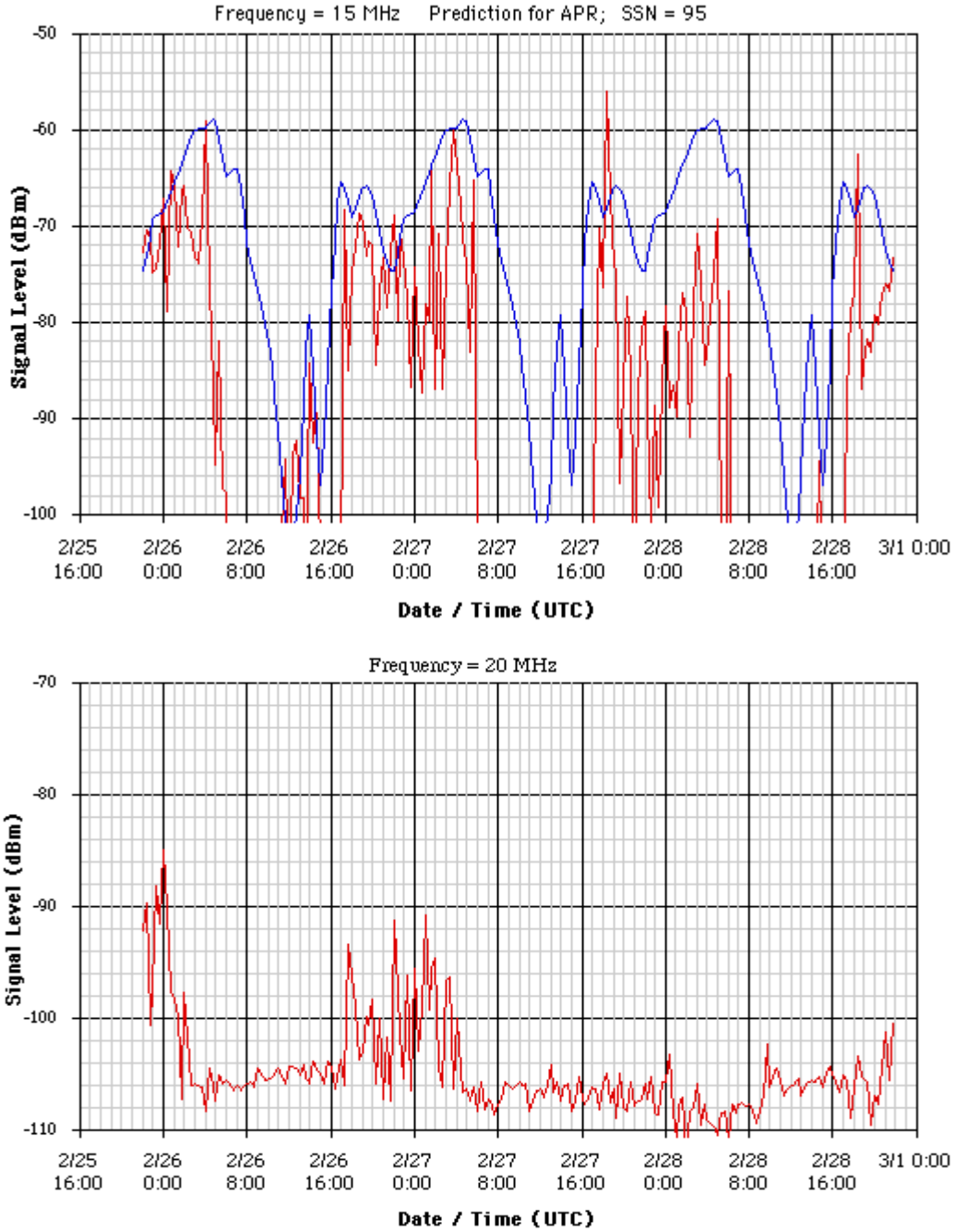

Figure 4.2. Sample graphs of WWV/WWVH field strength as recorded by HAARP in Gakona, Alaska.

19300 km. About 22,000 QSL cards have been sent since the station went on the air in Kauai in 1971 through the end of 2002. Although the practice of requesting QSL cards has diminished in recent years, the station still receives a number of requests. Table 4.3 provides a list of countries where reception of WWVH has been verified by a QSL card from 1990 though 2002.

Table 4.3. Countries verifying WWVH reception from 1990 through 2002.

Broadcast frequency (MHz)	**Countries outside the United States where reception has been verified (listed alphabetically)**
2.5	Australia, Brazil, Germany, Japan, Poland, Slovakia
5	Argentina, Austria, Australia, Brazil, Canada, Columbia, Cuba, Germany, Indonesia, Israel, Italy, Japan, Korea, Mexico, Netherlands, New Guinea, New Zealand, Reunion Island, Russia, South Africa, Sweden, Switzerland, United Kingdom, Uzbekistan, Venezuela
10	Antigua, Argentina, Austria, Australia, Belgium, Brazil, Canada, Chile, Columbia, Cuba, Czech Republic, Finland, France, Germany, Hungary, India, Indonesia, Italy, Japan, Korea, Mexico, Netherlands, New Zealand, Peru, Reunion Island, Romania, Russia, South Africa, Spain, Sweden, Switzerland, Uzbekistan, Venezuela
15	Algeria, Argentina, Australia, Bangladesh, Belarus, Belgium, Brazil, Bulgaria, Canada, Chile, Columbia, Cuba, Czech Republic, Denmark, Ecuador, Finland, France, Hungary, India, Indonesia, Israel, Italy, Japan, Korea, Latvia, Lithuania, Luxembourg, Malaysia, Mexico, Norway, Pakistan, Peru, Poland, Puerto Rico, Philippines, Reunion Island, Russia, Solomon Islands, South Africa, Spain, Sri Lanka, Sweden, Switzerland, Tanzania, Ukraine, United Kingdom, Uruguay, Uzbekistan, Venezuela

3. Coverage Area for WWVB

Prior to 1997, the effective radiated power (ERP) of WWVB was listed by NIST as 13 kW. A detailed report of the station's coverage at that power level was published in 1969 [47]. When engineering studies to upgrade the station and increase the power began in 1994, it was found that the transmitting hardware had perhaps degraded and that the current ERP was probably closer to 10 kW [48]. The ERP was increased by 4 dB on December 19, 1997, and an additional 3 dB on August 5, 1999, bringing the ERP to its current level of about 50 kW [33]. This increase in the ERP greatly increased the coverage area.

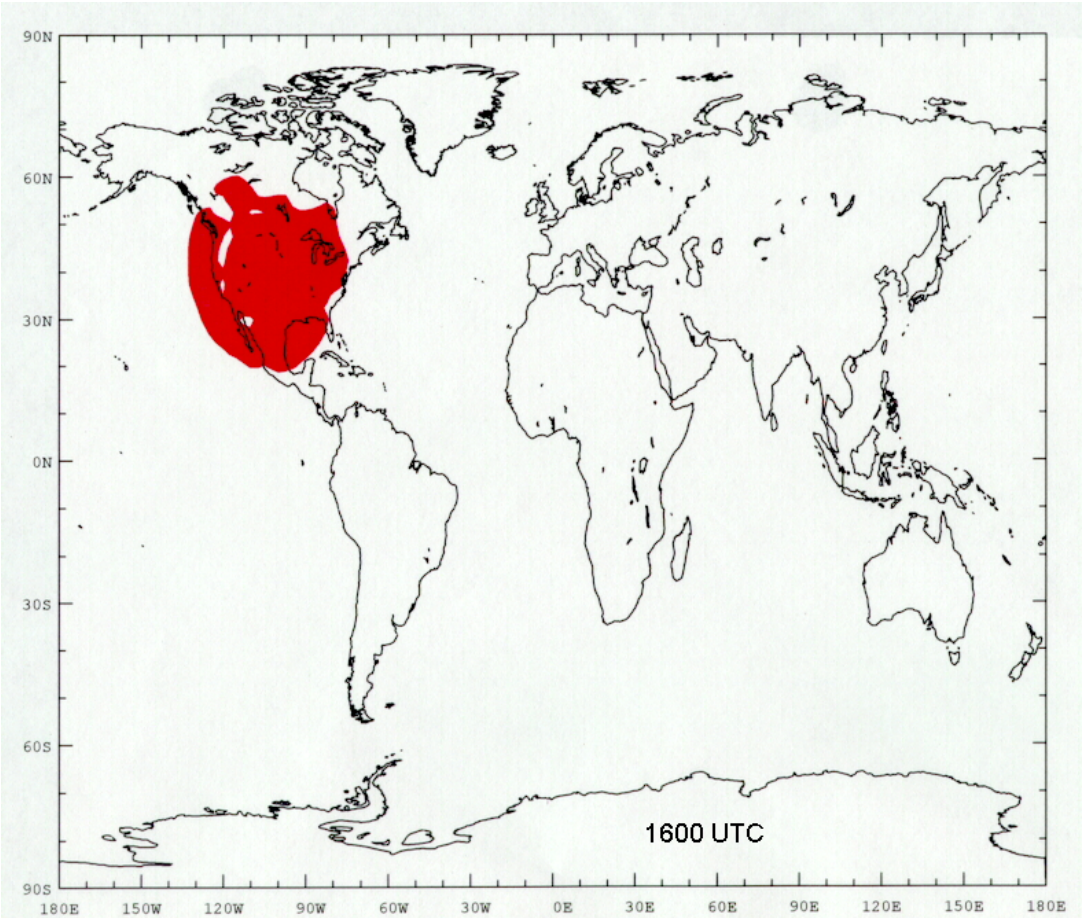

Figure 4.3. Predicted WWVB coverage at 1600 UTC (day).

Computer simulations of the coverage area of the 50 kW signals were done by the Space and Naval Warfare Systems Command (SPAWAR) for various times of the day during the various seasons. Figure 4.3 simulates field strength at 1600 UTC (daytime) when the coverage area is near its smallest size, and Figure 4.4 simulates field strength at 0400 UTC (night) when the coverage area is near its largest size. Both figures represent simulations for the month of October. The shaded areas on the coverage maps show where the field strength is expected to be 100 µV/m or more; or sufficient power for most commercial WWVB receivers to work, provided that there is not an excessive amount of ambient background noise.

It should be noted that radio station MSF shares the 60 kHz frequency allocation with WWVB, and broadcasts a 16 kW signal continuously from the United Kingdom. This signal produces a small amount of interference with the WWVB signal along the eastern coast of the United States, although the effect on the coverage area is believed to be minimal. Radio station JJY also shares the 60 kHz frequency allocation, and began broadcasting a 12.5 kW signal from

Japan on October 1, 2001. At this writing, the JJY broadcasts have created no reported problems with the WWVB signal coverage, although JJY reception has been reported in Hawaii at both 40 and 60 kHz, and in California at 40 kHz.

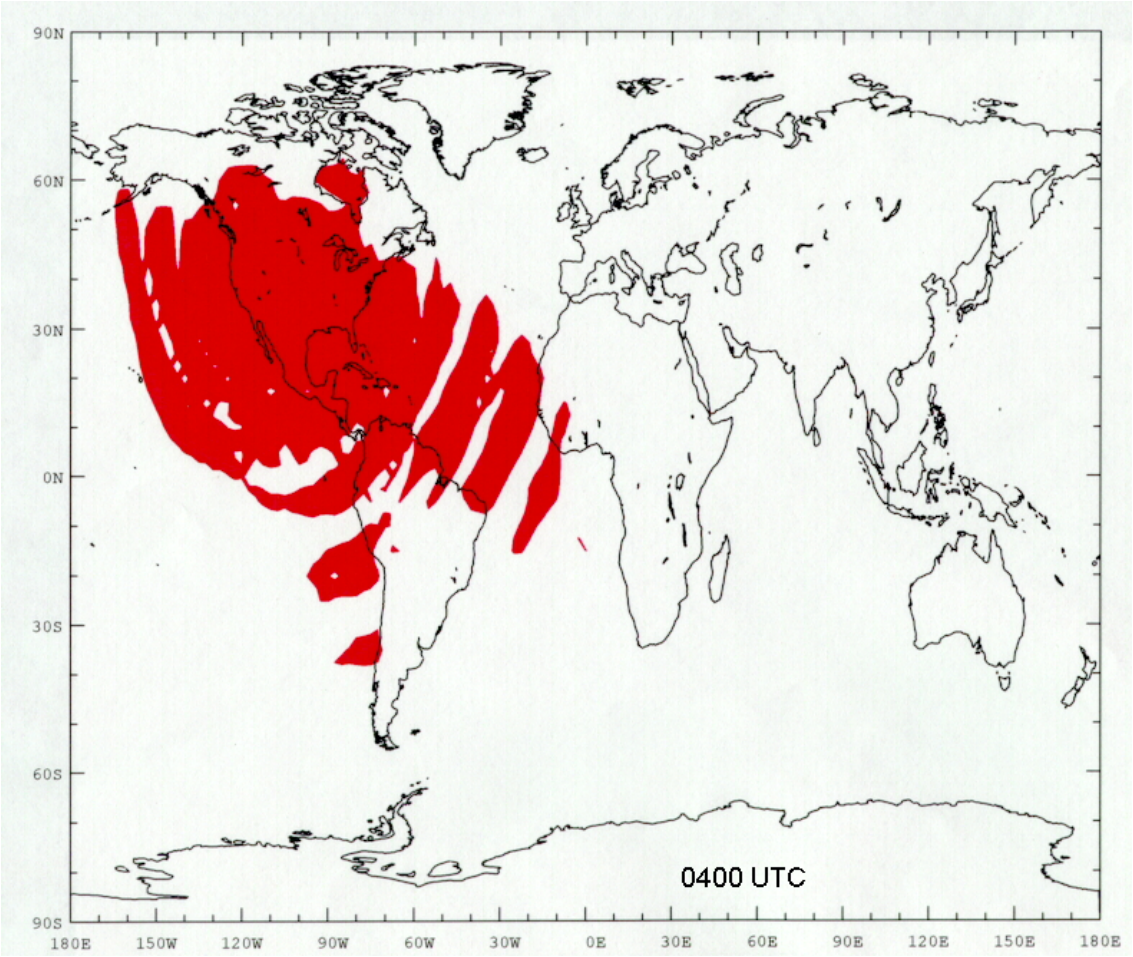

Figure 4.4. Predicted WWVB coverage at 0400 UTC (night).

a) The Effect of Receiver Sensitivity on Coverage Area Size

Another factor affecting the size of the coverage area is receiver sensitivity. While some users continuously track the WWVB carrier as a frequency calibration reference (4.C.2), the great majority of WWVB customers use the signal only to obtain time-of-day. They use low-cost receivers with small antennas designed to work indoors. Rather than continuously tracking the signal, these receivers simply attempt to successfully decode one time code frame (or a few time code frames) every 24 hours. This attempt is made at night, since the signal is stronger once the sun goes down (Figure 4.4). The signal is strongest when it is dark at both the WWVB transmitter and at the receiving site. Once a complete time code frame is successfully

decoded, a quartz clock is set on time. A typical quartz crystal found in a radio controlled clock can keep time to within 1 s for a few days or longer. Therefore, the customer won't notice any visible error when they view their clock display, even though it has probably gained or lost a fraction of a second since the last synchronization.

Receiver sensitivity figures provide an estimate of how much field strength is required before the receiver can decode a time code. This required level of field strength needs to be present only at night when synchronization attempts are made, and maps like Figure 4.4 can provide a rough idea of where the required field strength (100 µV/m in the figure) will be obtainable. However, some receivers have better sensitivity than 100 µV/m (often specified as < 50 µV/m), and what especially matters is the signal-to-noise ratio, or the level of the signal compared to the level of the electrical noise near the same frequency. Raising the noise level is just as harmful as reducing the signal level. For example, if the radio-controlled clock is near a source of interference (such as a computer monitor) the noise level will increase, and the clock might not be able to synchronize. If the radio-controlled clock is in a building with a metal roof, much of the signal will be blocked. Therefore, the signal level will be reduced, and the clock might not be able to synchronize. As a consequence, we have heard from many customers whose radio controlled clocks do not work inside the coverage area shown on the maps. This is probably due to a local source of interference, or due to a very low quality receiver design. The NIST staff has also had numerous reports from Alaska and Hawaii that the clocks work fine, even though these states are outside the coverage area shown in Figure 4.4. This is probably due to the low amount of ambient background noise found in a sparsely populated area.

A radio controlled clock's ability to decode a time code often depends more on the quality of its digital signal processing (DSP) software than the sensitivity of the receiver. The WWVB time code is sent at the very slow rate of 1 bit per second. A complete time code contains 60 bits of information, and requires a full minute to be sent. In order for a RCC to synchronize, it has to be able to successfully read and decode 60 consecutive time code bits beginning at the start of a UTC minute. Some products require at least two time codes to be read before they display the received time, meaning that at least 120 consecutive time code bits must be successfully decoded. Fluctuations in the signal strength, even if the signal is strong, might make it very difficult for clocks with unsophisticated DSP software to read that many bits in a row and successfully decode the time.

Given cost restraints, signal restraints, and especially size restraints (the length of the ferrite bar antenna is less than 60 mm in most WWVB clocks, and about 15 mm in most wristwatches), radio clock manufacturers have done a remarkable job. Several manufacturers have produced very small, low power consumption receivers with sophisticated DSP technology that can separate the signal from the noise, even under less than optimal conditions. Of course, not all products are created equal, and some low quality units struggle to receive the signal even under the best of the conditions. We expect that receiver technology will continue to improve due to the competitive nature of the marketplace, and that the projected coverage area will eventually be equivalent to the actual reliable coverage area for even the lowest priced WWVB clocks.

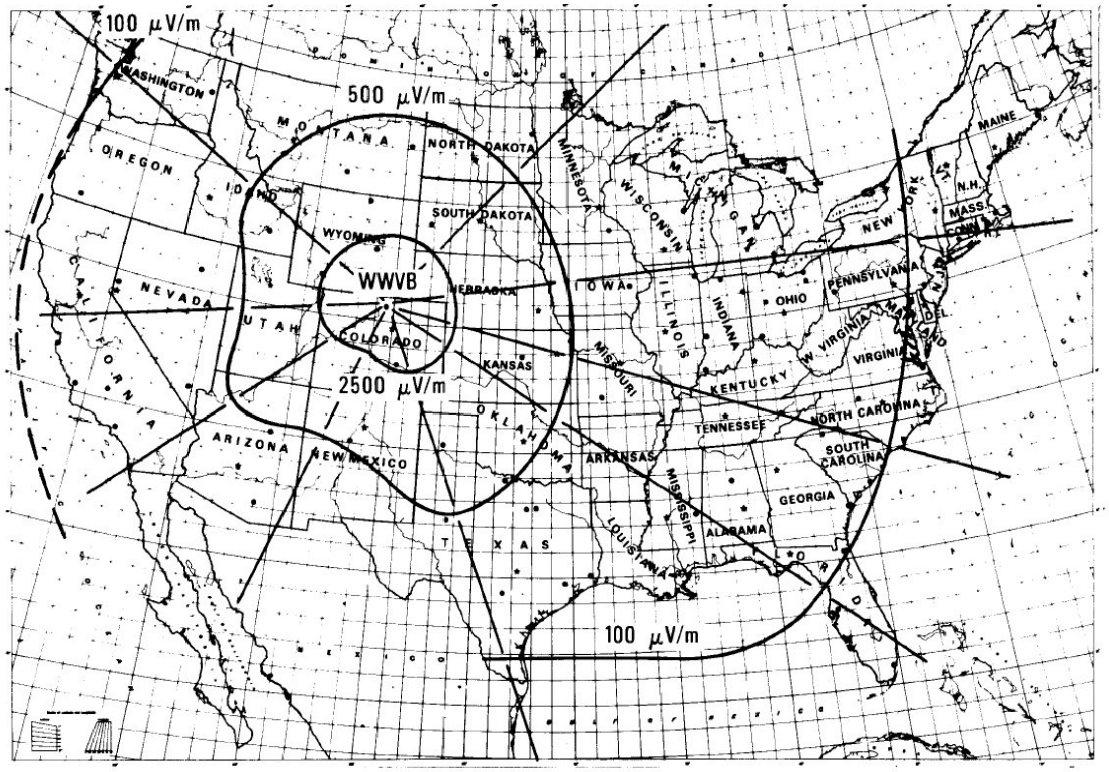

Figure 4.5. Field strength radial map reproduced from 1967 study.

b) Field Strength Readings (Radial Measurements)

In the late 1960's, NBS conducted a study along with the Federal Office of Civil Defense that attempted to measure the field strength of the WWVB and the now-defunct WWVL signals at varying distances from the stations. The purpose of this work was to evaluate the usefulness of the stations as part of a proposed emergency alert network, to be used in case of a national emergency.

The project had several elements, one of which was to measure the intensity of the WWVB signal along nine radial paths from the stations. The lines, or radials, were known by their end points or destinations. Distances ranged up to more than 2700 km (1700 mi) from the stations as shown in Figure 4.5 [47].

The results of the study gave some indication of the field strength of the WWVB signal at about 13 kW radiated power, the normal operating level at that time. When a major upgrade of WWVB was completed in 1999, the radiated power was raised to 50 kW [33]. However, other than computer-generated estimates (such as Figures 4.3 and 4.4), no field strength data with the higher power levels existed except for a few measurements made very close to the station. New field strength measurements were required to verify the computed estimates.

It was determined that data should be taken along the same radial paths used during the original study, so that the new data could be compared to the old. Although the details of the actual measurement techniques used for the first study were sketchy, the new measurements were to be made using techniques developed by the U. S. Navy for accurately measuring field strength of LF and VLF signals [49]. A specially constructed receiving antenna was purchased and used with a selective level voltmeter to take the measurements. The measurement sites were carefully chosen to avoid objects or terrain features that would interfere with the signal [44].

Two sets of measurements were taken. The first, in the fall of 2000, involved taking daytime readings along the east coast from Maine to North Carolina, and then returning to the transmitter on the radial path that ends at Cape Fear, North Carolina (Table 4.4). The following year another set of daytime measurements were taken along the Jupiter, Florida radial path, then along the coast of the Gulf of Mexico, returning along the Brownsville, Texas radial (Table 4.5).

Table 4.4. Sample field strength data, East coast/Cape Fear radial, September-October 2000.

Location	**Distance (km)**	**Signal strength (µV/m)**
Bangor, Maine	2960	43
Laurel, Maryland	2408	240
Elizabethtown, North Carolina	2418	170
Mammoth Cave, Kentucky	1688	380
Fulton, Missouri	1131	240
Hiawatha, Kansas	828	1202
Trenton, Nebraska	342	4786

Table 4.5. Sample field strength data, Jupiter-Brownsville radial, January-February 2001.

Location	**Distance (km)**	**Signal strength (µV/m)**
Miami, Florida	2828	85
Jacksonville, Florida	2632	76
Madison, Florida	2267	120
Hancock County, Mississippi	1801	569
Beaumont, Texas	1531	1135
Brownsville, Texas	1713	631

The results of these measurements are “snapshots” of WWVB signal levels on a particular day in a particular area. While a full-fledged study of WWVB field strength would involve continuous readings over a period of months from many locations (a future possibility

discussed in the next section), these radial measurements seem to validate the computer-generated estimates, and more radial measurements are planned for the future. One interesting finding of the radial measurements was the daytime field strength of 43 µV/m recorded in Bangor, Maine. This suggests that a properly designed receiver could successfully decode the WWVB signal in the far northeast corner of the United States, even during the daylight hours.

c) Monitoring Field Strength in Near Real Time

At this writing (2004), NIST is developing a field strength monitoring system that will continuously collect signal strength readings from WWVB receivers located across the United States. This information will be sent back to the NIST Boulder laboratories via an Internet connection and displayed in near real-time on the Time and Frequency Division web site at http://tf.nist.gov. This will help WWVB customers determine whether there are any current problems with the broadcast. This system was not completely operational at the time of this publication, but signal strength meters have already been installed at both NIST campuses (Boulder, Colorado and Gaithersburg, Maryland). Once completed, this system is expected to provided more valuable data than any previous field strength study.

An informal, internal monitoring program has been in place for several years, using data collected from receivers located at the NIST laboratories in Boulder, Colorado, at station WWVH in Hawaii, and until recently, at a United States Naval facility in Annapolis, Maryland. Data collected from these sites help NIST personnel determine whether the WWVB signal is being transmitted properly.

C. How the NIST Radio Stations are Used by their Customers

Three surveys of the radio station audience have been conducted by NBS/NIST in an attempt to find out how the radio stations are used, and to determine the overall level of customer satisfaction. The first survey, conducted in 1975, received over 12,000 responses and the results were published as *NBS Technical Note 674* [50]. The second survey, conducted in 1987 to 1988, received over 6,000 responses. The survey results were not formally published by NIST, but a summary of the results appeared in an International Telecommunication Union (ITU) document [51]. The most recent survey, conducted in 2001, had nearly 15,000 respondents, and the results were made available by NIST via the Internet [52]. The 1975 survey was specific to HF radio and did not include questions about WWVB. The two more recent surveys were extended to cover all NIST time and frequency services, including WWVB.

The information in this section was compiled from survey results, and from information obtained from customer letters, phone calls, and emails.

1. WWV/WWVH Customers

This section looks at WWV and WWVH customers, and describes some of the ways they use the service. It categorizes customers based on their primary application: time, frequency, or use of the non-timing related voice announcements.

a) Time Customers

Not surprisingly, all three surveys identified the voice time-of-day announcements as the most widely used feature on WWV, and that nearly all users of the broadcasts use this feature. Figure 4.6 shows results from the 2001 survey. All three surveys also showed that the most common application for the voice time-of-day announcements is the manual synchronization of clocks and watches. Since WWV and WWVH are the only precision wireless time signals available by radio in the United States, they are acknowledged as the best available source for manual clock synchronizations. Many wireless time codes exist, but only WWV and WWVH provide a signal that can be listened to and used with no decoding equipment other than the human ear. A number of other timing applications have been identified as listed below.

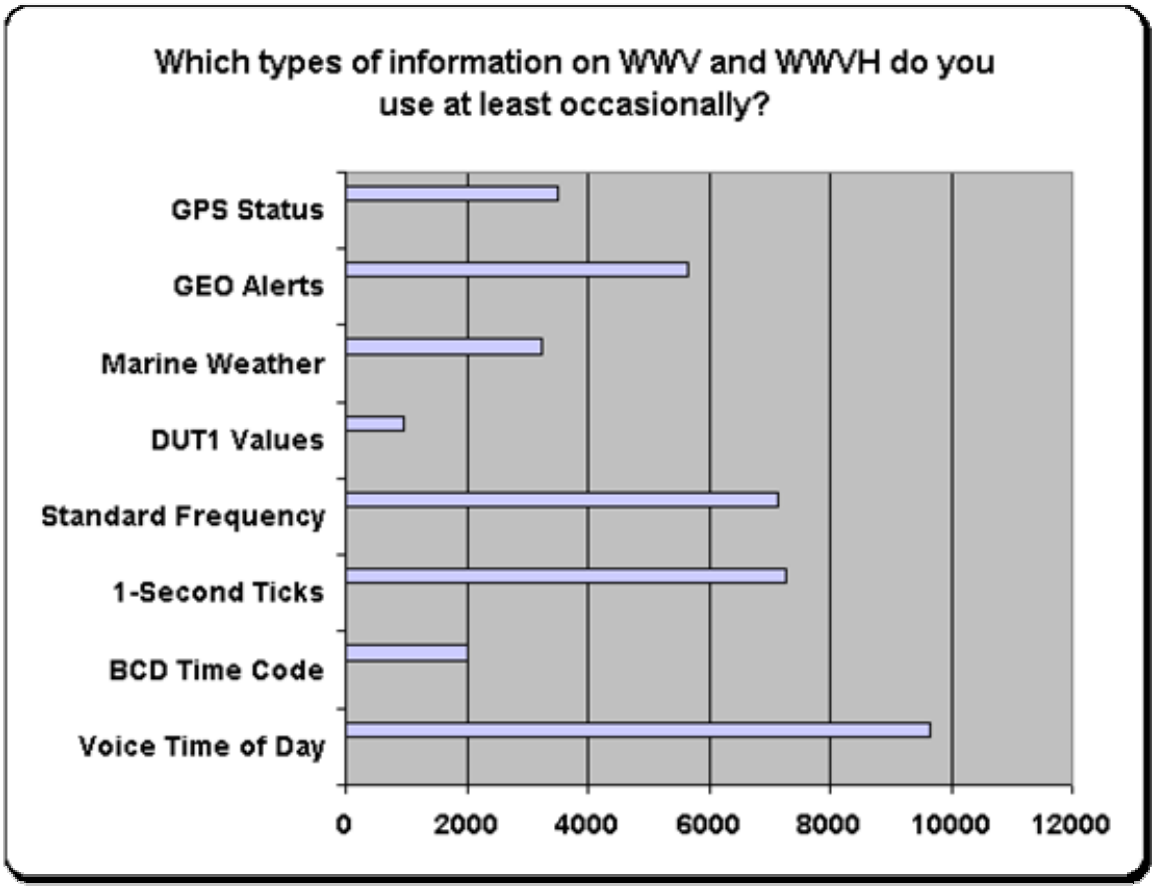

Figure 4.6. Results from 2001 survey regarding WWV/WWVH usage.

Time Code – The WWV time code (on a 100 Hz subcarrier) serves as a reference signal for radio-controlled clocks that drive timing displays or provide time information to a computer system. The nature of the HF signal makes WWV radio-controlled clocks harder to design,

more expensive (both the antenna and receiver), and perhaps less reliable than their WWVB counterparts. However at this writing, at least three U.S. companies (listed alphabetically) still produce and sell WWV time code receivers: Chrono-Log (Havertown, Pennsylvania), ESE (El Segundo, California), and U.S. Traffic Corporation (Santa Fe Springs, California). In addition, many older, discontinued time code receivers manufactured by other companies remain in use. These products automatically synchronize to the WWV signal without operator intervention. Since the time code actually consists of audio information, there have been, at various times, low cost products available that synchronize computer clocks after decoding the time from the WWV/WWVH station audio. These products have used various schemes to obtain the audio, such as a cable connected to the headphone jack of a shortwave receiver, or an acoustic coupler connected to a telephone after dialing the telephone time-of-day service.

One noteworthy example of time code usage was a project begun by the city of Los Angeles, California in 1988 to use WWV/WWVH receivers to synchronize traffic lights at more than 1,000 intersections. City officials estimated that this project saved motorists 55,000 hours a day in driving time, 22 million gallons a year in fuel, and 6,000 to 7,000 tons of pollutants per year [53].

Hobbyists and Educators – WWV and WWVH certainly have value as educational tools, as evidenced by the many thousands of letters, phone calls, and e-mails received by NIST over the years from teachers, scout leaders, parents, amateur radio operators, and others. These educators have related numerous examples of using the signals to teach and mentor young people about timekeeping, science, radio, and other related topics.

Mariners (navigational use) – Even in today's world where GPS receivers are widely available, a few sailors still engage in celestial navigation, and many others use it as an emergency backup to GPS. Celestial navigation requires a small amount of equipment (sextant, calculator, compass, astronomical tables, etc.), and an accurate time source, which can be the audio time announcements from WWV or WWVH received with a low cost shortwave portable [54]. Several comments from the 2001 Customer Survey [52] pertained to celestial navigation, including this one (edited slightly for clarity):

> *"My family is interested in sailing. We have crossed the Atlantic three times between U.S. & U.K. in our 26 ft. boat. We have always used our sextant, your signal (WWV) and BBC time signals for navigation. Many thanks!"*

Local Telephone Time-of-Day Services – It was estimated in the 1970s that about four billion telephone calls were made annually to local telephone time-of-day services, and that nearly all of these services used WWV as their synchronization reference [55]. The number of calls made to local phone services is undoubtedly much smaller today, since there are many alternate ways to get the time; and phone companies can synchronize their services to other time sources, such as WWVB or GPS. However, we are aware that some phone companies in large metropolitan areas synchronize their time-of-day services to WWV using equipment that has been in place for many years. While estimating their numbers is difficult, it is clear to us that a

substantial number of people still indirectly get the time from WWV when they call their local phone company's time number.

Astronomers – The 2001 Customer Survey [51] contained a number of comments from customers using WWV/WWVH signals to time astronomical observations, including lunar occultations and meteor showers. Audio time signals can be heard in the dark when clock displays can not be seen, or when the light from clock displays cannot be tolerated. Another technique used by astronomers is to film an astronomical event with a camcorder and play WWV in the background as a "soundtrack." The time accuracy of this technique is limited by the frame length of the video, which is typically about 33 ms. This audio track authenticates the time of the filmed observation, and is invaluable when sightings from different locations are compared [56].

Time Interval Calibrations – Many private and government calibration laboratories (particularly state metrology laboratories) use WWV or WWVH as a reference signal for time interval calibrations, such as the calibration of stop watches and timers. This allows the laboratory to establish traceability for time interval measurements back to NIST and to the International System (SI) definition of the second. The audio tones are used as signals to start and stop the timer being calibrated [57].

b) Frequency Customers

The performance of WWV and WWVH as a reference source for frequency calibrations is severely limited by the instability of the HF radio path. While oscillator performance has improved by many orders of magnitude since WWV first went on the air, the received frequency uncertainty of HF broadcasts has remained virtually unchanged [58]. Thus, it has been many years since HF radio broadcasts have been capable of calibrating the best available oscillators. As early as the 1950's, WWV had been supplanted by U. S. military VLF broadcasts as the primary frequency reference at many calibration laboratories [59]. From the 1960's to the 1990's, frequency calibration laboratories employed a number of reference signals with lower uncertainties than HF, including television signals, satellite signals, and LF signals from WWVB and LORAN-C [60]. And shortly after the Global Positioning System (GPS) satellites were declared fully operational in late 1993, GPS had become by far the most widely used signal for frequency calibrations of the best available oscillators [61].

Although it has been some 50 years since WWV and WWVH have been the frequency calibration reference of choice, they still are widely used for frequency calibrations with modest uncertainty requirements, including:

Radio Transmitter and Receiver Calibrations – When WWV began broadcasting in the 1920's, radio was in its infancy. The burgeoning number of new broadcast stations created a huge frequency calibration problem. Broadcasters had to stay near their assigned frequencies so that they did not interfere with adjacent stations. Radio receivers needed tuning dials that were at least reasonably accurate so that listeners could find the station they were looking for. By broadcasting as accurate a frequency signal as was then possible, WWV played a very

important role in solving this problem. It quickly became a reference for the calibration of both radio transmitters and receivers [3].

As oscillator technology improved, beginning with the appearance of the first quartz oscillators in the late 1920's, the radio frequency problem became less serious, and today it is relatively easy for most broadcasters to stay within tolerance of their assigned frequency allocation (20 Hz for AM radio, 2000 Hz for FM, and 1000 Hz for television video signals) [62]. However, all transmitted frequencies need to be checked periodically, and the 2001 Customer Survey [52] indicated that WWV is still widely used for the calibration of both commercial and amateur transmitters, and especially by radio amateurs and shortwave listeners who use the signals to calibrate their receiver dials.

Audio Frequency Calibrations Including Standard Musical Pitch (440 Hz tone) – WWV/WWVH broadcast standard audio frequencies of 440, 500, and 600 Hz for use as a traceable calibration source. The 440 Hz is particularly noteworthy, since it serves as the ultimate reference for the calibration of pianos and other musical instruments. Since 1939, A440 (the musical note A above middle C at 440 Hz) has been the internationally recognized standard for musical pitch [63]. The piano tuner listens to a standard musical pitch and compares it to the same note on the piano keyboard. The piano is then adjusted by tightening or loosening strings, until it agrees with the audio standard. The actual piano tuning is generally done with a transfer standard such as a tuning fork or an audio tone generator, since those devices are easy to bring to the piano site and their signals are always available. However, the audio from WWV/WWVH is often used as a reference for calibrating the transfer standard.

Low Cost Test Equipment – WWV/WWVH are used by some calibration laboratories to provide traceable frequency calibrations of low cost test equipment, such as signal generators and frequency counters. The signals serve as an acceptable reference if the uncertainty requirement for the device under test does not exceed 1×10^{-7}. They are also used for a quick check of test equipment that does not require certification.

Calibration of Police Radar Devices – State metrology labs are often responsible for the calibration of tuning forks used by law enforcement agencies to check the radar devices that measure vehicle speed. The calibration of tuning forks is a simple frequency calibration where uncertainties of 1×10^{-3} are adequate for measuring vehicle speed to within a fraction of a mile per hour. WWV/WWVH provides a convenient and accepted way to establish traceability for these measurements using techniques that utilize either the 600 Hz audio tones as a reference for calibrating tuning forks [64], or that use the 10 MHz carrier as a reference for calibrating a frequency counter that is then used to calibrate tuning forks [65].

c) Voice Announcement Customers (Non-Timing Announcements)

As Figure 4.6 indicates, a number of WWV/WWVH listeners use the non-timing information contained in the voice announcements. A few types of these customers are described below.

Radio amateurs and short wave listeners – Since WWV and WWVH are widely used by the amateur radio community, it is probably no surprise that the geophysical alerts provided by NOAA are the station's second most popular feature, next to time and standard frequency information (Figure 4.6). The geophysical alerts provide information about the current conditions for HF radio propagation. They allow users to estimate how far radio signals will travel, and the maximum usable frequency and lowest usable frequency for a given time and location [38]. Although this information is available by telephone and Internet, it is convenient for radio operators to get it from their radio without requiring any additional equipment.

Mariners – The National Weather Service (a division of NOAA, and like NIST part of the United States Department of Commerce) provides voice announcements of marine storm warnings on both the WWV and WWVH broadcasts. Atlantic high seas warnings can be heard at 8 and 9 minutes past the hour on WWV; Pacific high seas warnings can be heard at 10 minutes past the hour on WWV, and at 48 to 51 minutes past the hour on WWVH. Since the time announcements are sometimes used for celestial navigation (as previously discussed), the HF broadcasts have long been recognized as a good medium for marine storm warnings.

GPS Users – Users of the Global Positioning System (GPS) can hear a 45 s long status report at 14 and 15 minutes after the hour on WWV, and at 43 and 44 minutes after the hour on WWVH. The reports are provided by the United States Coast Guard. Figure 4.6 indicates that a substantial number of customers listen to these reports.

2. WWVB Customers

WWVB customers (described in 4.A.2) now number in the millions, due to the large number of radio controlled clocks and wrist watches that synchronize to the 60 kHz signal. While the huge number of time-of-day users is what the station is primarily known for, this section will focus on other types of customers who get time and/or frequency from WWVB.

a) Time Customers

WWVB time distribution receivers are used at many organizations that require time legally traceable to NIST, and that need more reliable reception than can be provided by WWV/WWVH. The largest manufacturer of these products has historically been the Spectracom Corporation of East Rochester, New York, which entered the WWVB marketplace in 1972. Time distribution receivers continually track the signal, and require an outdoor antenna for best results. They are used to distribute time to communications systems, computer networks, wall clocks (synched to a master clock), voice recorders, radio consoles, phone systems, 9-1-1 emergency systems, police dispatch systems, and so on. This type of receiver includes a large digital clock display, and typically outputs a time code in several different formats. Time codes in text and binary format are output in computer readable format using standard serial interfaces such as RS-232 and RS-485. Standard time code formats like those defined by the Inter-Range Instrumentation Group (IRIG) or the National Emergency Number Association (NENA) are also available. In some systems, a WWVB receiver serves as a backup or alternative time source to a Global Positioning System (GPS) receiver.

Another large group of WWVB timing customers use the signals to satisfy the requirements of the Order Audit Trail System (OATS) prescribed by the National Association of Securities Dealers (NASD) Securities and Exchange Commission. Under NASD Rule 6957, all clocks used by member firms must be synchronized to within 3 seconds of UTC(NIST). This includes all computer clocks used to record time associated with electronic order handling or execution software (a requirement in effect since August 7, 1998). It also includes all mechanical clocks, including manual devices used to record time (a requirement in effect since July 1, 1999). This means that NASD members that use mechanical time-stamping devices or record order receipt time on order tickets manually must do so from a synchronized business clock. Obviously, both the NIST computer time services [36] and the low-priced WWVB clocks play a huge role in allowing NASD members to achieve OATS compliance.

Some WWVB receivers produce an on-time 1 pulse per second (pps) signal that can be used for synchronization purposes. However, synchronization to within better than 1 ms is generally not attempted with WWVB. The factors that limit the accuracy of WWVB receivers as a synchronization source are fully discussed in the measurement uncertainty sections found in Chapter 5, but we can briefly describe them here. Receivers that generate a 1 pps signal have to choose a cycle of the carrier to use as the on-time marker (OTM). The period of the 60 kHz carrier is 16.67 µs, so the OTM shifts by that amount whenever a new cycle is selected. There might be a range of 30 or more cycles that could be chosen as the OTM, leading to an ambiguity of 500 µs or more. This is in addition to the path delay (a function of the receiver's distance from the station) which would need to be estimated and corrected for.

b) Frequency Customers

Prior to the advent of low priced radio controlled clocks, the largest group of WWVB customers were those who used the signals as a frequency reference. Numerous calibration laboratories and electric power companies relied on the signals as the reference for their frequency measurements. The path of the 60 kHz signal is very stable, particularly in the contiguous 48 states, where mostly groundwave signals are received. It is possible to measure frequency with an uncertainty of a few parts in 10^{12} when averaging for one day, and lower uncertainties are possible over longer intervals. This probably makes WWVB the best alternative to GPS as a frequency calibration reference, with the possible exception of the 100 kHz LORAN-C system, whose long range future has yet to be decided at this writing (2004).

WWVB receivers designed to work as frequency standards can distribute standard frequencies or be used as a reference to calibrate other oscillators. These devices are known as *carrier phase tracking receivers*. They discipline a stable quartz oscillator to agree with the WWVB signal and outputs standard frequencies such as 100 kHz, 1 MHz, 5 MHz, and 10 MHz. Some receivers designed as frequency standards ignore the time code entirely and do not output time-of-day or an on-time pulse. WWVB frequency standards were once easy to find (sold in the United States by companies such as Spectracom, Hewlett-Packard, Tracor, and others), but have currently disappeared from the marketplace, although hundreds of existing units still remain in use. We hope to see new products of this type reappear on the marketplace, both as an alternative and as a back-up to GPS disciplined oscillators. To help support WWVB

frequency users, NIST publishes phase monitoring data that is collected by averaging the signals received in Boulder against the UTC(NIST) time scale for one day. This information is available on the Time and Frequency division web site (Table 4.6).

D. Customer Interaction and Support

This section describes how NIST interacts with customers via telephone, e-mail, and postal mail. It also describes how information about the radio stations is distributed to customers.

1. Distribution of Information about the NIST Radio Stations

This section describes how information about the NIST radio stations is distributed to existing customers and potential new customers. A good portion of this activity is educational. NIST attempts to make the public aware of the existence of the services, and to educate the public on how to use the services.

a) Web Site

The NIST web site contains separate sections for all three NIST radio stations, and a large amount of information about each station. The web is used to distribute information about broadcast outages, broadcast formats, sources for receivers, and to answer frequently asked questions. The amount of material presented on the Web about the radio stations was expanded in the period from 2001 to 2004, and further expansion is planned. Table 4.6 lists some of the topics covered on the web site, and provides links to each topic.

b) Publications

The primary publication describing the radio stations is *NIST Special Publication 432*, entitled *NIST Time and Frequency Services*, which was last revised in January 2002 [38], the first revision in about 11 years. The SP 432 contains most of the information found on the web site, and some unique information not found elsewhere. It is intended both as an introduction to the NIST radio stations, and as a guide to their use.

Guides to the NIST (formerly NBS) Time and Frequency Broadcast Services have historically been very popular, with many thousands of copies printed. In recent years, even more copies have been distributed electronically. Since 1976, four guides have been published as Special Publication 432. From 1960 until 1974, eleven guides were published as *NBS Special Publication (or Misc. Publication) 236*. Other publication numbers were used prior to 1960. These guides are now available from the http://tf.nist.gov web site as historical references.

While the SP 432 provides a general introduction to the NIST radio stations, it does not provide much information about advanced measurements using the broadcasts. For this information, NIST offers "The Time and Frequency User's Manual," *NIST Special Publication 559*, published in 1976, 1979, and most recently in 1990 [60]. The SP 559 is one of the most popular downloads from the NIST web site, with thousands of copies downloaded monthly, and it is expected that a new edition will be written and published. It has chapters dedicated to both HF and LF radio broadcasts.

Table 4.6. Web links to NIST radio station information.

WWV Home Page	http://tf.nist.gov/stations/wwv.html
Information broadcast by WWV	http://tf.nist.gov/stations/iform.html
WWV time code	http://tf.nist.gov/stations/wwvtimecode.htm
WWV broadcast format	http://tf.nist.gov/stations/wwv-wheel.htm
WWV station library	http://tf.nist.gov/stations/hflibrary.htm
WWV broadcast outages	http://tf.nist.gov/stations/wwvoutages.htm
WWVH Home Page	http://tf.nist.gov/stations/wwvh.htm
Information broadcast by WWVH	http://tf.nist.gov/stations/iform.html
WWVH time code	http://tf.nist.gov/stations/wwvtimecode.htm
WWVH broadcast format	http://tf.nist.gov/stations/wwvh-wheel.htm
WWVH station library	http://tf.nist.gov/stations/hflibrary.htm
WWVH broadcast outages	http://tf.nist.gov/stations/wwvoutages.htm
WWVB Home Page	http://tf.nist.gov/stations/wwvb.htm
WWVB coverage area	http://tf.nist.gov/stations/wwvbcoverage.htm
WWVB time code	http://tf.nist.gov/stations/wwvbtimecode.htm
WWVB station library	http://tf.nist.gov/stations/lflibrary.htm
WWVB broadcast outages	http://tf.nist.gov/stations/wwvboutages.htm
WWVB phase monitoring data	http://tf.nist.gov/service/wwvbtrace.htm
General information about radio-controlled clocks	http://tf.nist.gov/stations/radioclocks.htm
Manufacturers of time and frequency radio receivers	http://tf.nist.gov/general/receiverlist.htm
Telephone Time-of-Day Service	http://tf.nist.gov/stations/sig.html

Many other publications about the radio stations are available in the “station libraries” found on the web site (the links are listed in Table 4.6). It should be noted that many of the publications about the stations date back to the 1970’s or earlier. Very little about the stations was published in the 1980’s and 1990’s. This is probably because the stations represent a well-established, “tried and true” technology, and most of the new documents published by the division focus on recent experiments, measurements, and discoveries. However, the document you are reading, the recent revision of the SP-432 [38], and the material recently added to the NIST web site are tangible examples of an attempt to reverse this trend.

c) Technical Support (E-mail, Phone, and Postal Mail)

NIST personnel quickly respond to queries made by customers about the radio stations, and offer technical support whenever necessary, as described below.

E-mail – NIST typically receives (on average) about 20 e-mails per week about the radio stations, with the majority dealing with radio-controlled clocks. Some e-mails go directly to the radio stations, others go to the Time and Frequency Services group in Boulder, Colorado. E-mail addresses are listed on the division web site at http://tf.nist.gov. Most e-mails are answered within 24 to 48 hours, unless research is required to answer the question. In some cases, when the initial e-mail is ambiguous or incomplete, and an e-mail conversation is necessary, but most issues are resolved with one or two e-mails.

Phone calls – While e-mails are preferred, NIST staff is available during normal business hours on Monday through Friday to field telephone calls about the radio stations. It is estimated that at least 10 calls per week are received, and most questions are immediately answered.

Postal mail – The stations receive several letters per week via regular postal mail. Some qualify as "fan mail" from enthusiastic customers. Others ask questions, or make the QSL requests discussed earlier. Letters/QSLs are usually responded to within two or three business days after their receipt.

d) HF Station Voice Announcements

NIST sometimes inserts announcements into the WWV and/or WWVH broadcasts that inform customers about news related to the broadcast services. Past experience has shown that these voice announcements are an effective way to reach our customer base, particularly those who haven't visited (or seldom visit) the division web site. For example, the 2001 Customer Survey [52] was publicized using broadcast voice announcements, and this resulted in several thousand respondents either requesting printed survey forms or responding through the web site.

Chapter 5

Measurement Uncertainties

This section discusses the measurement uncertainties of the signals transmitted by the NIST radio stations, and of the signals received by customers. It also discusses establishing traceability to UTC(NIST).

A. Frequency Uncertainty of Transmitted Radio Signals

This section discusses the frequency uncertainty of the signals broadcast by NIST radio stations as they leave the transmitter sites. It also describes the allowable tolerances for each broadcast with respect to the UTC(NIST) standard maintained in Boulder, Colorado and how the quality control system at NIST maintains these tolerances.

The frequency uncertainty of the stations is essentially determined by how well station personnel steer the frequency of the station clock to agree with UTC(NIST). The delays through the station hardware, including the transmitters and antenna systems are expected to remain relatively constant, and therefore they only impact the time uncertainty, and not the frequency uncertainty. The average frequency of the station clocks is expected to deviate from UTC(NIST) by only about 1×10^{-13} when averaged over the course of a day or longer.

1. Transmitted Frequency Uncertainty of WWV and WWVB

Since WWV and WWVB share the same site, they share the same station clock, a commercial cesium standard. Two backup cesium standards are always on-line, and one will automatically replace the on-line standard in the event of a failure, as described in Chapter 2. WWV is located in the same building as the station clock, and both 5 MHz and 1 Hz signals are distributed from the station clock to the transmitters (Figure 2.2). WWVB is in a separate building, and is connected to the station clock by an underground transmission line that is approximately 396 m in length, and that has a transmission delay of approximately 1.9 μs.

The station clock provides the reference for all time and frequency functions performed by the station. On WWV, all five carrier frequencies (2.5, 5, 10, 15, and 20 MHz) are derived from this clock, as are the 100 Hz subcarrier, the 1 Hz on-time marker (OTM), and the audio frequencies (440 Hz, 500 Hz, 600 Hz, 1000 Hz, and 1500 Hz). On WWVB, the 60 kHz carrier and the 1 Hz OTM are derived from this clock. Therefore, the frequency uncertainty of the signals transmitted by both stations is directly tied to the performance of the station clock, and to how well the clock can be steered to agree with the national frequency standard located approximately 80 km away in Boulder.

a) The Method Used to Control the Station Clock Frequency

Since the transmitters operated by NIST have always been located "off-site", far away from the laboratory where the national standards are maintained, controlling the station clock at each transmitter site to closely agree with UTC(NIST) has always presented a unique challenge. Many methods were used in the early days to steer the station clock, including carrying working standard wavemeters to the station [4, 5], carrying portable oscillators to the station, the monitoring of VLF and LF signals at the station site [28], transmitting a 50 MHz timing signal from the Boulder laboratories to the station [66], or the common-view reception of television signals [67].

While all of the above methods met the uncertainty requirements of their respective eras, the situation became much easier with the launch of the GPS satellite constellation (which began in 1978), and the introduction of the common-view GPS measurement technique [68]. Common-view GPS has been used to continuously compare the WWV/WWVB station clock to UTC (NIST) since the 1980's. Two common-view GPS receivers are located at the Fort Collins site. One of the receivers is an original NBS single-channel receiver designed by NIST (then NBS) personnel in the 1980's [69]. The other is a commercial single-channel model that performs a nearly identical function. Both receivers follow the common-view tracking schedule published by the Bureau International des Poids et Mesures (BIPM), recording 13 minute tracks from each satellite listed on the schedule [61]. They compare the on-time 1 Hz signal from the station clock to UTC(NIST), using signals from the GPS satellites as a common-view reference. Both receivers are connected by analog modems to dedicated telephone lines, and the data can be downloaded at any time for analysis.

Common-view measurements have a long history in time and frequency metrology, since they provide a useful way to compare clocks at different locations. The premise is simple: two laboratories can measure the time difference between their clocks by each comparing their local clock to the same reference at the same time. The laboratories record and exchange their measurements, and the difference between the measurements is the difference between the times kept by the two clocks. The common-view reference drops out of the equation.

To visualize how the common-view technique works, imagine two people living at opposite ends of town who want to compare the time on the grandfather clocks in their living rooms. This would be an easy problem to solve if they could get the clocks together in the same place and compare them side by side. However, moving the clocks is not possible. Therefore, each person agrees to write down the time displayed by their clock when the fire whistle (located midway between them) blows in their town, an event that happens each day around noon. They then call or e-mail each other and exchange the time readings. If the first clock read 12:01:35 and the second clock read 12:01:47, then simple subtraction tells them that the second clock was 12 seconds ahead of the first clock when the fire whistle blew. Whether the fire whistle blew exactly at noon or not is unimportant. It only matters that it was heard at the same time at both locations. If so, the measurement reveals the difference between the two clocks, and the comparison is successful.

Instead of a fire whistle, common-view GPS comparisons (Figure 5.1) employ a satellite (S) and two receivers (A and B). The satellite transmits a time signal that is simultaneously received by both receivers. Both receivers compare the received signal to their local clock and record the data. Receiver A receives the signal over the path d_{SA} and compares the reference to its local clock (S – Clock A). Receiver B receives the signal over the path d_{SB} and records (S – Clock B). The two receivers then exchange and difference the data. Delays that are common to both paths d_{SA} and d_{SB} cancel out, but delays that aren't common to both paths contribute uncertainty to the measurement. The result of the measurement is (Clock A – Clock B) with an error term of ($d_{SA} - d_{SB}$). This error term can be estimated and applied as a correction to the measurement.

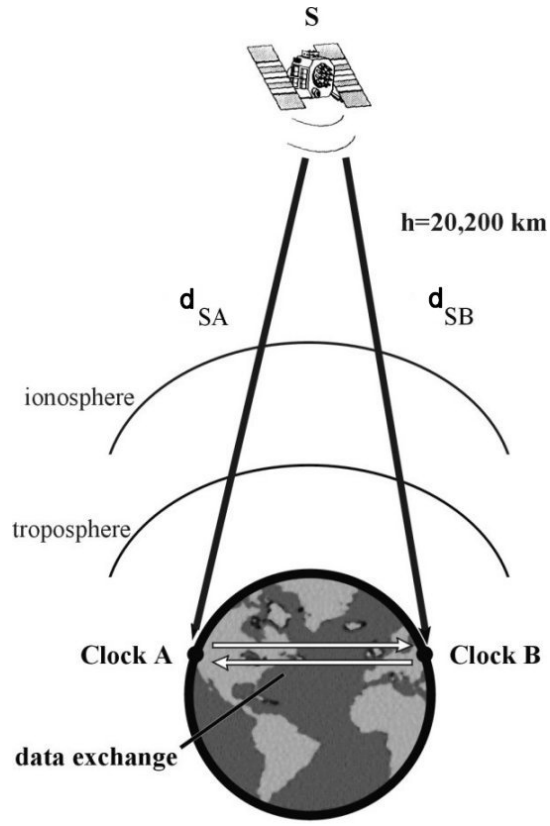

Figure 5.1. Common-view GPS technique.

On average, nearly 40 common-view tracks are recorded between Boulder and Fort Collins each day, and the data are exchanged via telephone lines. There are several reference GPS receivers located at the NIST laboratories in Boulder that are used to compare individual GPS satellite broadcasts to UTC(NIST). These receivers have been carefully calibrated and their delays are known to within a few nanoseconds or less. Like the receivers at Fort Collins, they are connected via analog modems to dedicated telephone lines.

A dedicated computer system, called the Radio Station Time Monitor (RSTM), dials the GPS receivers once per day, and downloads data from one or more of the reference receivers in Boulder, and from the two receivers in Fort Collins, and then automatically stores, graphs, and displays the data. An RSTM is also installed at WWVH in Kauai and in Boulder. The RSTM can be configured to dial as many receivers as desired, making it possible for WWV/WWVB not only to compare their clock to UTC(NIST) in Boulder, but also to compare their clock to WWVH simply by making a telephone call to Kauai. Station personnel are trained to download and process the common-view data without using the RSTM, if necessary.

Figure 5.2 shows the RSTM software with a graph displayed containing 325 days of data from 2002 and 2003. The graph shows three traces, one a comparison between UTC(NIST) and WWV/WWVB, one a comparison between UTC(NIST) and WWVH, and one a comparison between WWV/WWVB and WWVH.

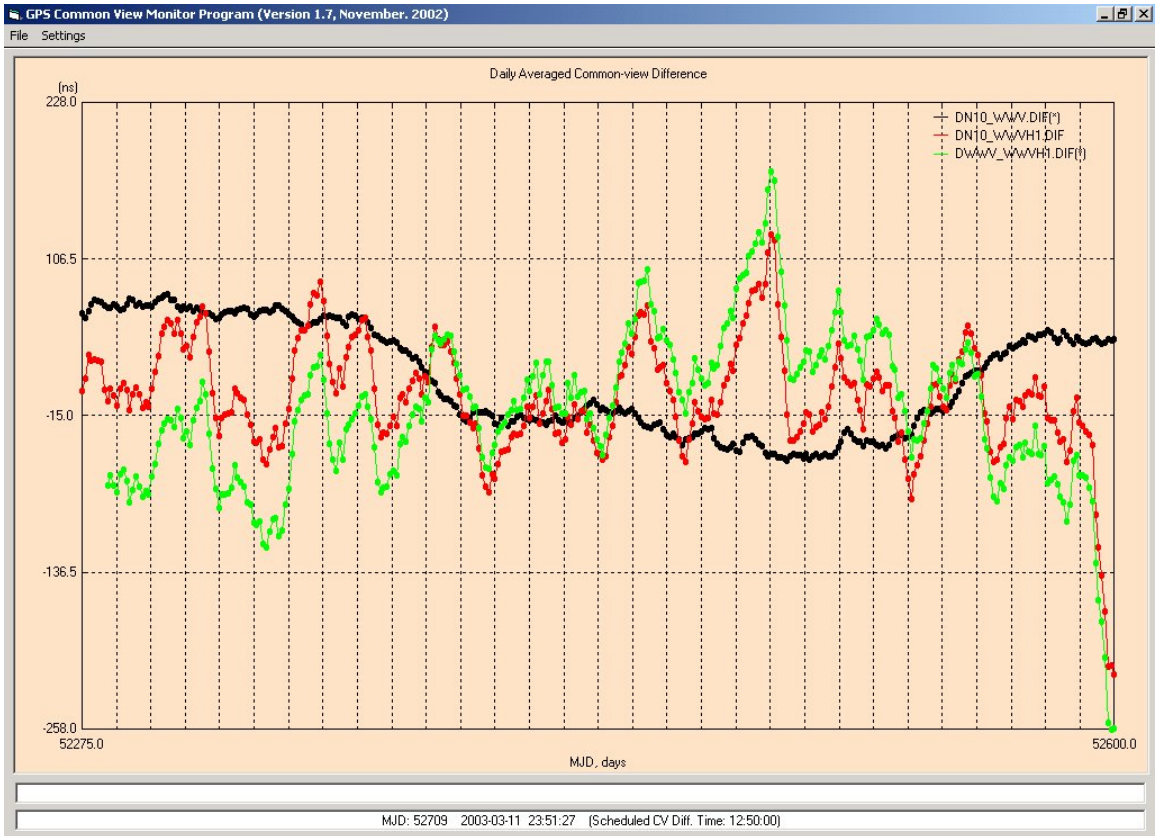

Figure 5.2. A graph displayed using the Radio Station Time Monitor (RSTM) software.

Station personnel use the results of the common-view measurements to apply time and/or frequency corrections to the station clock used as the reference for the broadcasts, enabling them to control the transmitted frequency to less than 1×10^{-13} with respect to UTC(NIST) when averaged over multiple days. Figure 5.3 shows the daily frequency offset values of the WWV/WWVB station clock with respect to UTC(NIST) over the 1 year period from May 10, 2003 to May 16, 2004. Some daily values (about 30 days) were lost since the GPS receivers can store only a few days of data in memory, and data are lost if a phone call is not successfully completed within several days, or if the receiver memory is reset. The average daily frequency offset seldom exceeds 2×10^{-13} and that the average frequency offset is near 1×10^{-15}. The largest daily frequency offsets occur on days when station personnel are adjusting the station clock. Figure 5.4 shows the frequency stability as estimated with the Allan deviation, $\sigma_y(\tau)$, is about 8×10^{-14} at 1 d, and near 2×10^{-14} after about 2 weeks.

It is important to note that common-view GPS is simply a measurement technique, and that GPS time is not the reference for any of the NIST stations. GPS satellites are simply used as the link between the clocks maintained in Boulder, Fort Collins, and Kauai. By design, NIST radio station time is completely independent of the time broadcast by the GPS satellites; a shift

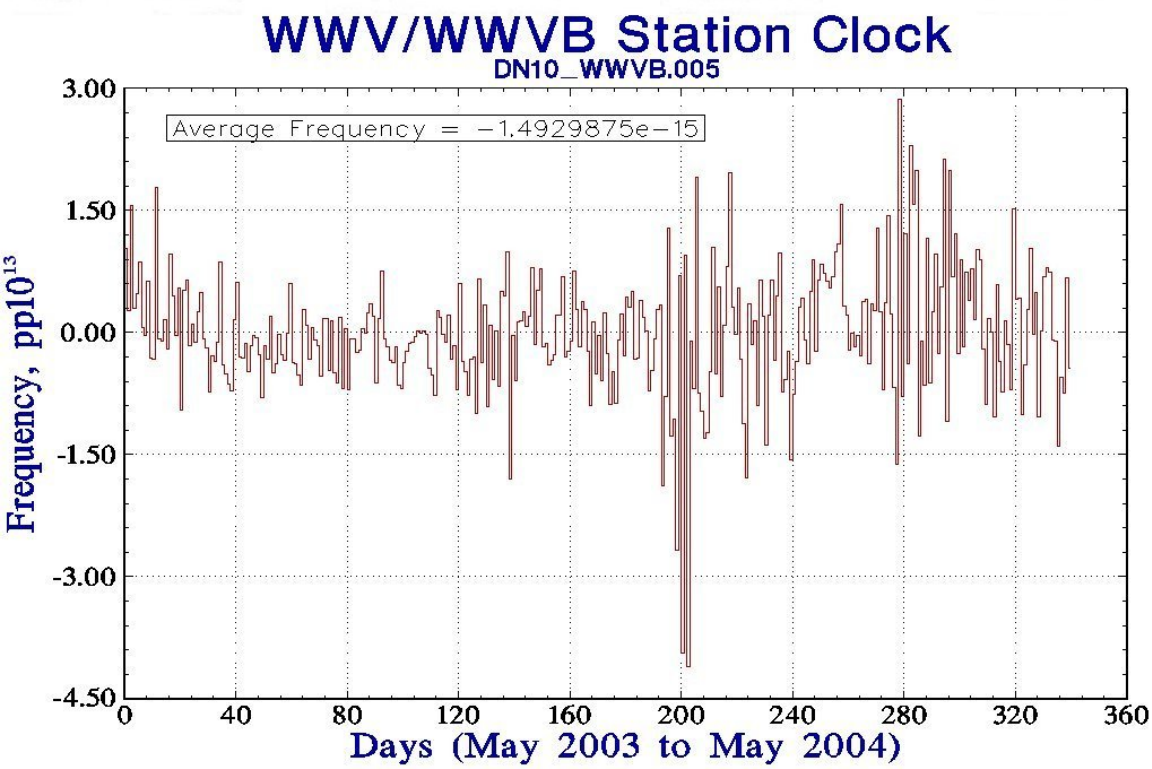

Figure 5.3. Daily frequency offset estimates for WWV/WWVB station clock.

or error in GPS time would not change the time broadcast by the radio stations, and the NIST stations would continue to keep and broadcast time without interruption even if GPS were unavailable. However, in the unlikely event that GPS were unable for an extended period, another measurement technique would be required to link the station clock to the national standard. Two candidates would be two-way satellite time transfer [70] since a satellite earth station exists at the Fort Collins site, or carries of a portable clock from the Boulder laboratories.

The station clock and all of the backup cesium standards at WWV/WWVB are also monitored using the NIST Frequency Measurement Service [37], the same service that NIST makes available to calibration and testing laboratories on a subscription basis. This service allows up to five oscillators to be simultaneously measured with an uncertainty of 2×10^{-13} over a 1 day interval, and allows station personnel to note the performance of all of their cesium standards at all times.

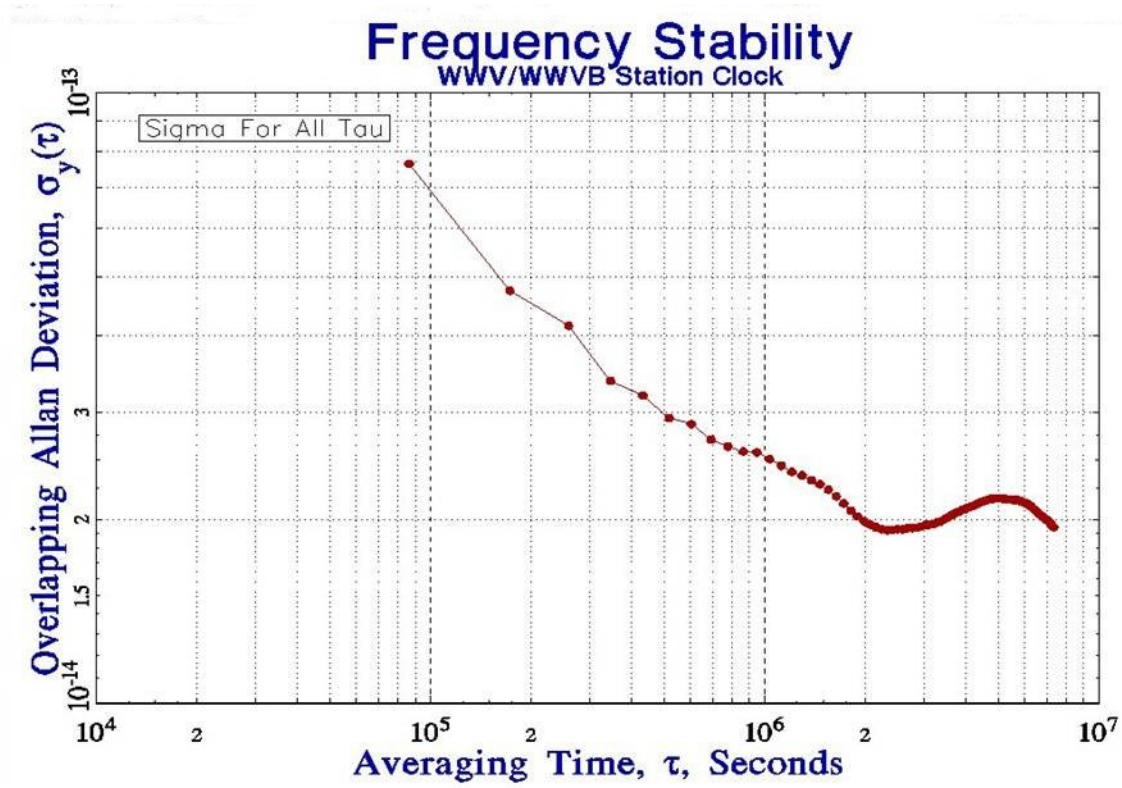

Figure 5.4. Estimated frequency stability of WWV/WWVB station clock.

2. Transmitted Frequency Uncertainty of WWVH

WWVH also uses a commercial cesium standard as its station clock. At least one backup cesium standard (usually two) is always on-line, and will automatically replace the on-line standard in the event of a failure, as described in Chapter 2.

The station clock provides the reference for all time and frequency functions performed by the station. All four carrier frequencies (2.5, 5, 10, and 15 MHz) are derived from this clock, as are the 100 Hz subcarrier, the 1 Hz on-time marker (OTM), and the audio frequencies (440 Hz, 500 Hz, 600 Hz, 1200 Hz, and 1500 Hz). Therefore, the frequency uncertainty of the signals transmitted by WWVH is directly tied to the performance of the station clock, and to how well the clock can be steered to agree with the national frequency standard located about 5495 km away in Boulder.

The WWVH station clock is compared to UTC(NIST) using the same common-view GPS technique previously described in Section 5.A.1.a). Even though the baseline between Kauai and Boulder is about 70 times longer than the baseline between Fort Collins and Boulder, on average there are still about 22 common-view satellite observations (each 13 minutes in duration) recorded each day between Boulder and Kauai. Figure 5.5 shows the daily frequency offset values of the WWVH station clock with respect to UTC(NIST) over the 1 year period

from May 10, 2003 to May 16, 2004. Some daily values (about 60 days) were lost since the GPS receivers can store only a few days of data in memory, and data are lost if a phone call is not successfully completed within several days, or if the receiver memory is reset. The average daily frequency offset seldom exceeds 4×10^{-13} and that the average frequency offset is near 2×10^{-15}. The largest daily frequency offsets occur on days when station personnel are adjusting the station clock.

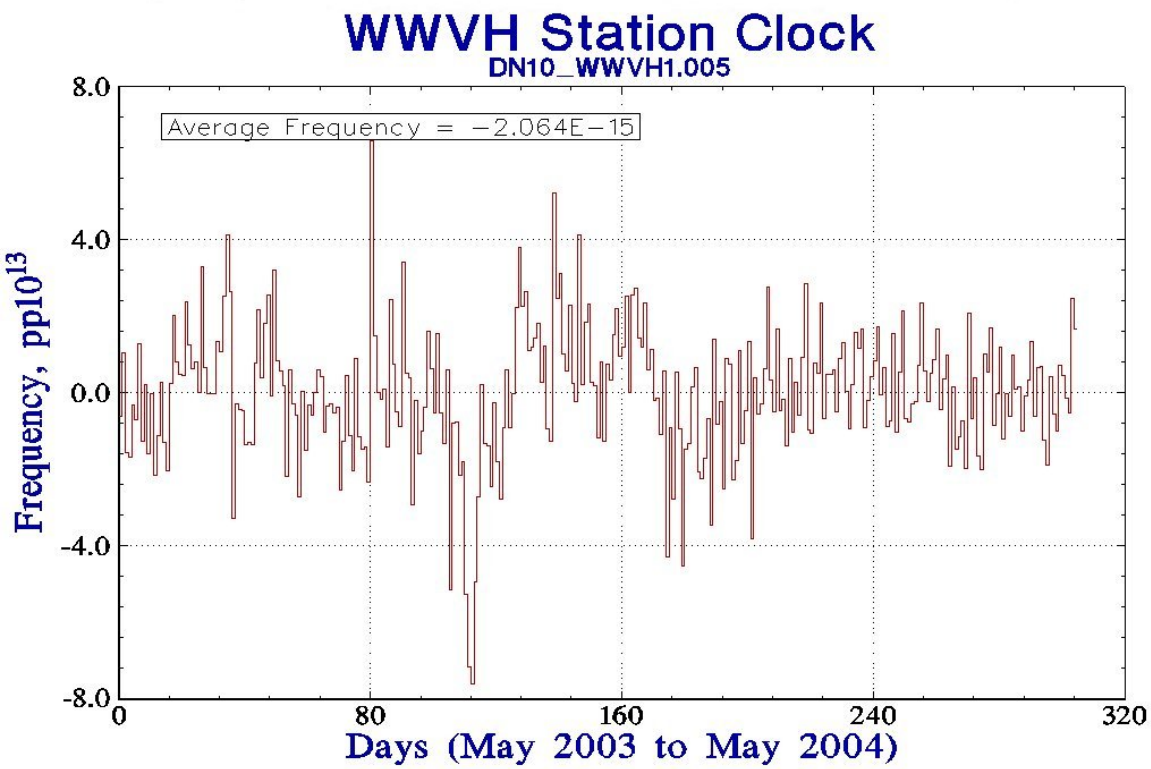

Figure 5.5. Daily frequency offset estimates for WWVH station clock.

Figure 5.6 shows that the frequency stability as estimated with the Allan deviation, $\sigma_y(\tau)$, is near 1×10^{-13} at 1 d, and near 3×10^{-14} after about 1 month. These uncertainties are larger than those shown for the WWV/WWVB station clock (Figures 5.3 and 5.4). This can be attributed to at least two factors: the cesium standard used at WWVH during this period is older and less stable than the device used at WWV/WWVB and requires more frequent adjustments, and larger temperature fluctuations occur at the Kauai site than at the Fort Collins site due to a poorer quality ventilation and air conditioning system. It is important to note, however, that the Fort Collins site supports both an HF and an LF broadcast, whereas only HF is broadcast from Kauai. Since the received frequency uncertainty of an LF broadcast is potentially several orders of magnitude smaller than the receiver frequency uncertainty of an HF broadcast, the frequency control requirements for the station clock are necessarily more stringent in Fort Collins then they are in Kauai.

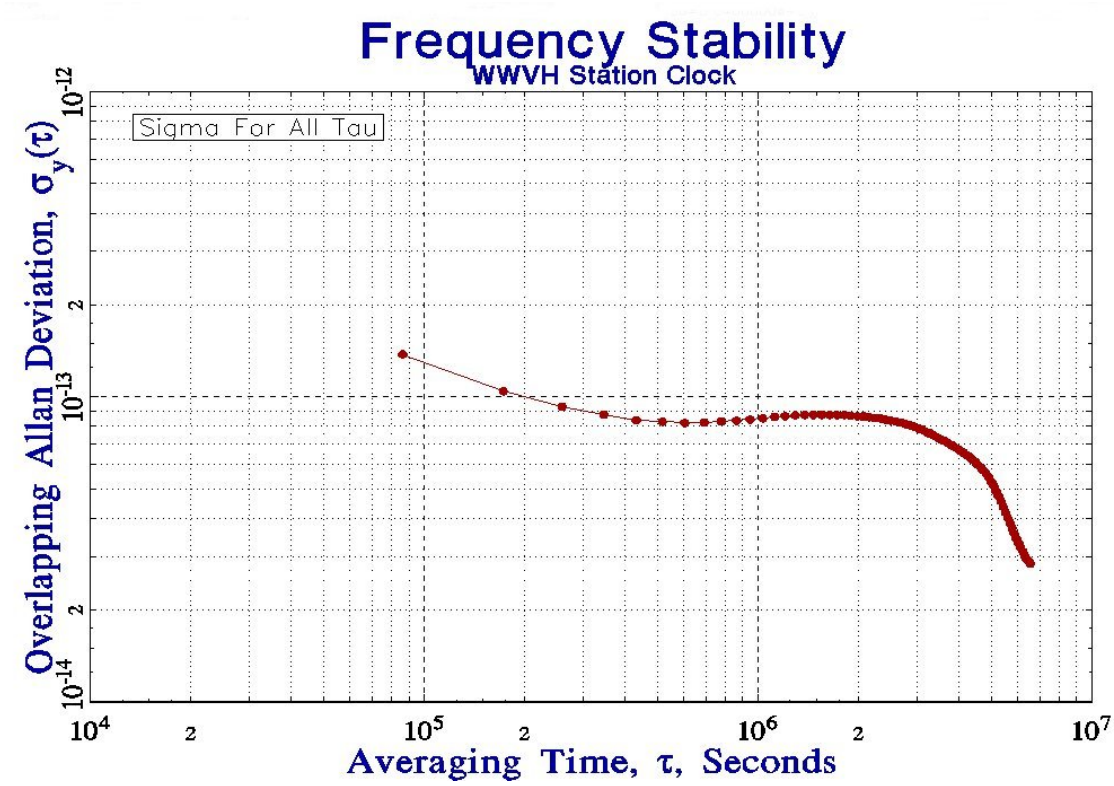

Figure 5.6. Estimated frequency stability of WWVH station clock.

To assure quality control of the broadcasts, the WWVH staff also calculates their daily offset (via GPS common-view) relative to the United States Naval Observatory (USNO) in Washington, DC, and to the Communication Research Laboratory (CRL) in Tokyo, Japan. Daily comparisons of the station clock are also made against signals received from the WWVB transmitter. The results of all of these measurements are entered into the station logbooks.

The station clock and all of the backup cesium standards at WWVH are also monitored with the NIST Frequency Measurement Service [37], the same service that NIST makes available to calibration and testing laboratories on a subscription basis. This service allows up to five oscillators to be simultaneously calibrated with a measurement uncertainty of 2×10^{-13} over a 1 day interval, and allows station personnel to note the performance of all of their cesium standards at all times.

B. Time Uncertainty of Transmitted Radio Signals

Each station transmits an on-time marker (OTM) that is synchronized as closely as possible with UTC(NIST). The station clocks produce a 1 pulse per second (pps) timing signal that is synchronized to UTC(NIST) to within ±1 μs. This allowable tolerance is easily met, and normally the OTM is synchronized at its source to within a few hundred nanoseconds or less.

However, relatively large delays are introduced by the transmission equipment and the antennas, so the uncertainty of the transmitted OTM is much larger than the uncertainty of the OTM produced by the station clock. This section discusses the uncertainty of the OTM as transmitted.

1. Transmitted Time Uncertainty of WWV and WWVH

The synchronization of the OTM at both WWV and WWVH is done at the time code generator (TCG). After the OTM leaves the TCG, however, it passes through the station's transmitters and the antenna system and additional delays are encountered before the signal actually is broadcast. The OTM is not advanced to compensate for these transmission delays, since they are much smaller than the delay variations introduced by HF radio propagation (Section 5.D.1) and thus their contribution to the received time uncertainty is negligible [71].

To test this, a near field measurement of the WWVH station delay was performed at the station site in Kauai in July 2003. A commercial shortwave receiver was calibrated for delays by feeding audio from the TCGs into a RF amplifier/driver, and then connecting this signal to the antenna input of the shortwave receiver. The audio output from the shortwave receiver was then compared to TCG audio that did not pass through the receiver using a dual channel oscilloscope (Figure 5.7). The receiver delay varied slightly on the four transmission frequencies used by WWVH (2.5, 5, 10, and 15 MHz), ranging from 118 to 122 μs.

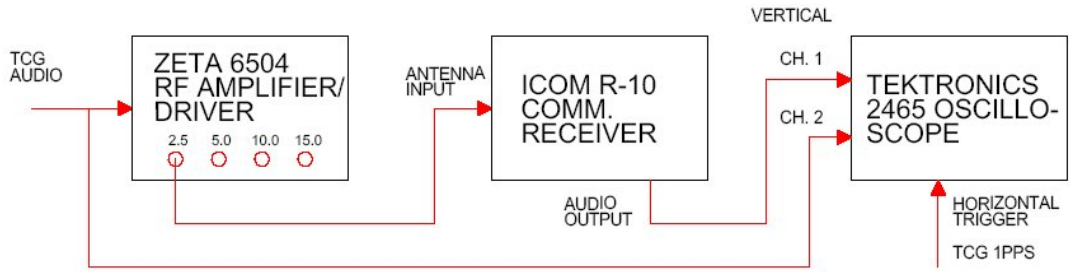

Figure 5.7. Measuring the delay of a shortwave communications receiver.

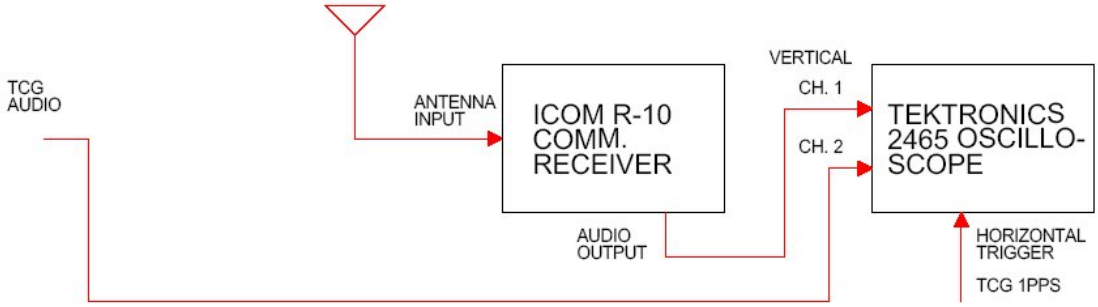

Figure 5.8. Measuring the delay of the WWVH broadcast.

The calibrated receiver was then used to receive the WWVH signal off the air at each of the four frequencies. The distance between the receiving antenna and the transmitting antennas ranged from 107 to 214 m, and the free space delay was calculated for each measurement. Then, the audio output from the broadcast was compared to the TCG audio that did not pass through the station's transmission system using a dual channel oscilloscope (Figure 5.8). The results of the test are shown in Table 5.1 and show that the station delay ranged from 3.3 to 59.6 µs, depending upon the transmission frequency. Similar delays exist at WWV.

Table 5.1. Results of WWVH broadcast delay measurements.

Frequency (MHz)	Receiver-transmitter distance (m)	Measured reception delay (µs)	Receiver delay (µs)	Free space transmission delay (µs)	WWVH broadcast delay (µs)
2.5	214	126	122	0.71	3.3
5	183	178	118	0.61	59.4
10	142	150	119	0.47	30.5
15	107	178	118	0.36	59.6

2. Transmitted Time Uncertainty of WWVB

The delay through the WWVB transmission system was measured by consultants from the U.S. Navy's LF/VLF support group in September-October 2000 [42] and in a follow up study performed in June-July 2003 [43]. The original goal of this study was to measure the group delay from the WWVB TCG through the dual antenna system, which was found to be about 500 µs [42]. However, it was found that the antenna group delay does not apply to the WWVB OTM because the bandwidth of the OTM is much wider than the bandwidth of the antenna system. The group delay of the antenna does vary widely over the bandwidth of the OTM and distorts the waveform, but it is not added to the OTM delay.

Table 5.2. WWVB component delays contributing to OTM delays.

Component	Delay (µs)
Time code generator	0.00
Microprocessor switch	1.02
Cable to control console	0.17
Control console	0.91
Console to switch through transmitter	11.12
Transmission line / antenna network	3.89
Cumulative delay (µs)	17.11

The transmitted time delay of WWVB was estimated by measuring the delay of all components between the TCG and the antenna terminals, including a microprocessor controlled switch, a cable that runs from the switch to the control console, the control console itself, the transmitters, and the transmission line and antenna (Figure 1.19). There are multiple paths through the transmission system since different TCGs, transmitters, and antennas can be selected, and several different combinations of components were measured [43]. It was determined that the typical delay from the TCGs to the antenna system is about 17.1 µs, as shown in Table 5.2. Recommendations were given providing ways to reduce or compensate for this delay and they are being considered at this writing (2004).

The delay through the system is relatively insignificant because it is difficult for receivers to consistently identify the OTM and use the signal as a precision timing reference (Section 5.D.2). The WWVB OTM is produced by an instantaneous 10 dB power drop of the 60 kHz carrier that is synchronized with the UTC second as shown on an oscilloscope in Figure 5.9. The oscilloscope is triggered with the UTC second, and shows the 60 kHz waveform output by the TCG. However, since the bandwidth of the antenna is much narrower than the OTM step function, the instantaneous 10 dB down step is distorted into a long tailed transient with an

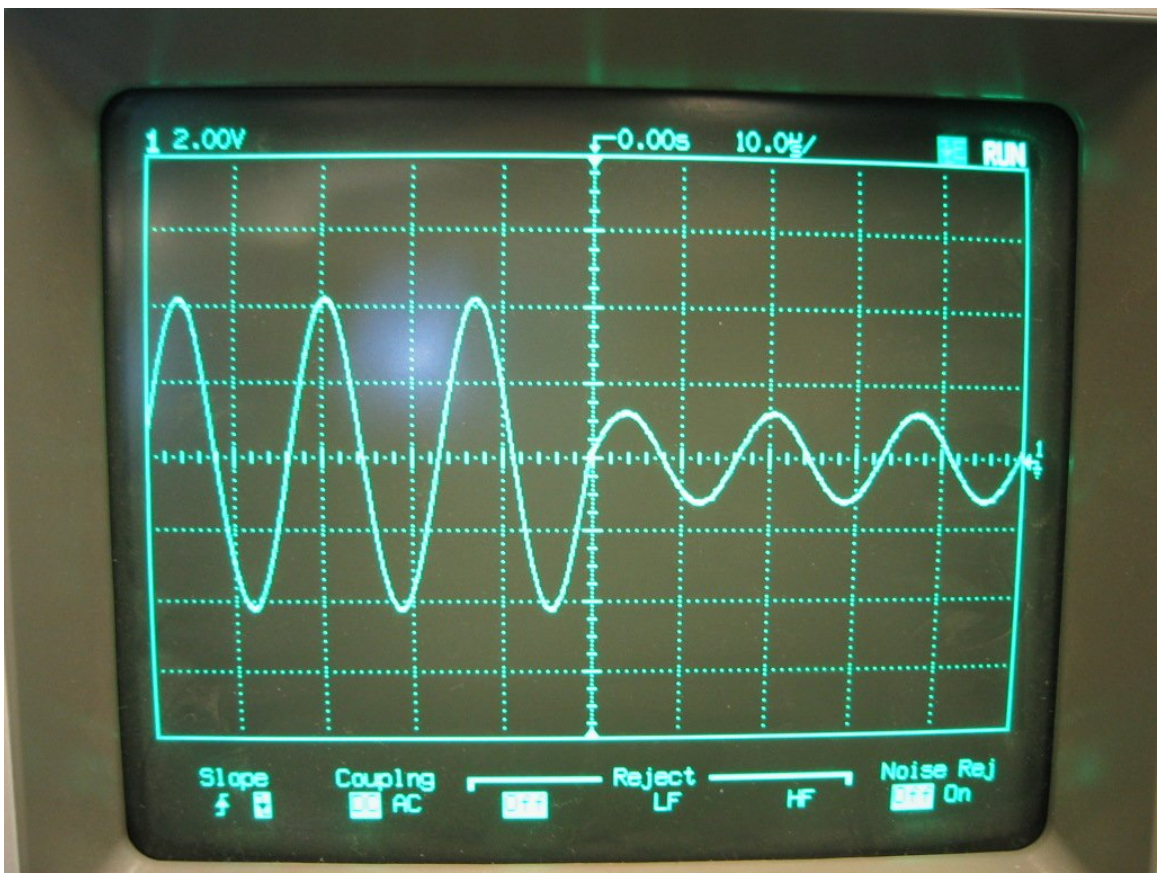

Figure 5.9. WWVB OTM.

exponential decay (Figure 5.10) that only vaguely resembles the original waveform. This decay time is related to the period of the antenna bandwidth (Chapter 2). The group delay concept loses its meaning here, because there is no specific detail of the exponential decay that can be identified with the group delay. The OTM is indicated by the start of the exponential decay, occurring approximately 17 µs after the UTC second. However, because of the long time constant it is not easy to determine exactly where the decay begins, or which cycle is the first cycle [43]. Therefore, even if the OTM were set exactly on-time, it would still be difficult to recover time at the receiving site with an uncertainty of less than three cycles (±50 µs).

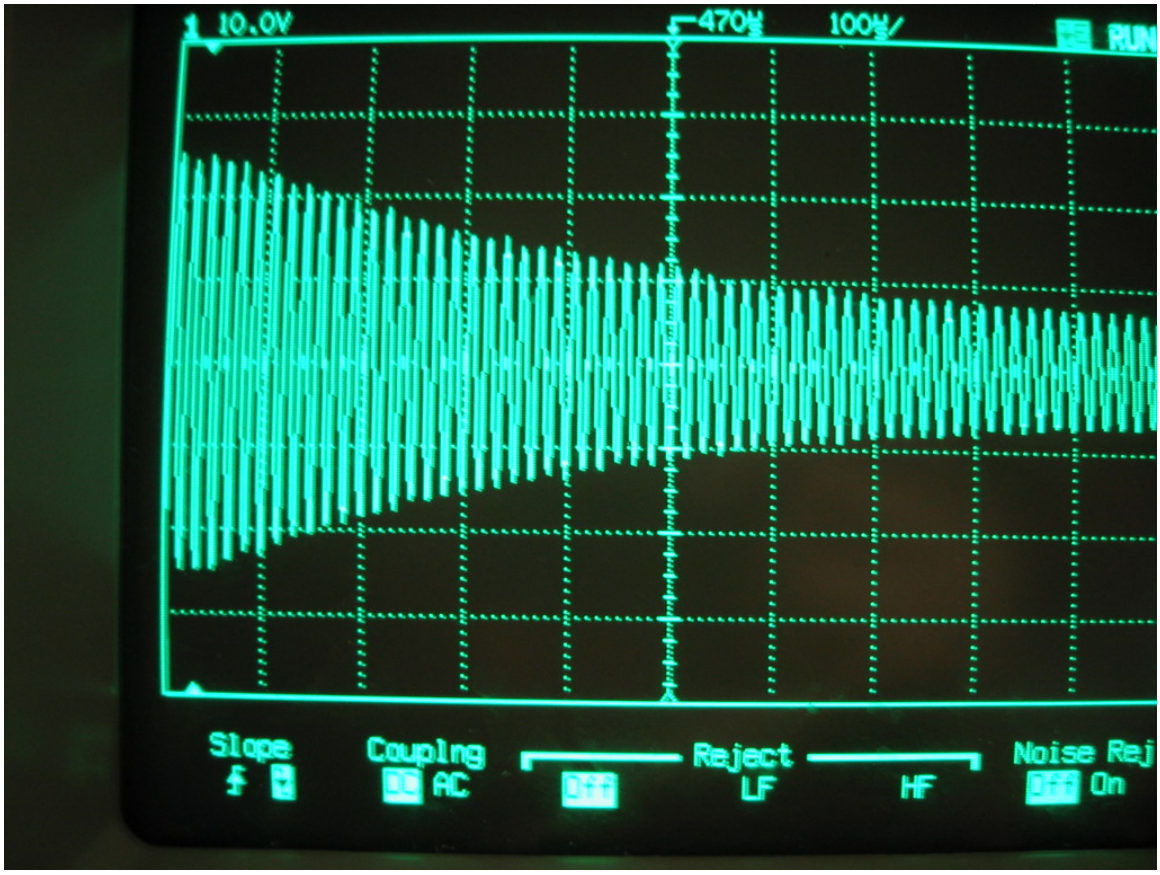

Figure 5.10. Antenna current showing the exponential decay of the WWVB OTM.

The *Time and Frequency Bulletin* [72] published monthly by NIST includes antenna phase measurements for WWVB (daily values recorded at 1300 UTC). These measurements have a nominal value of 5.70 µs that typically varies by only a few tens of nanoseconds from day to day, indicating that the station delay is relatively constant. This number should not be interpreted as the actual delay through the station since it does not take the delay of all components into account. However, the fact that it varies only slightly indicates that the relationship between the time code and the 60 kHz carrier is known and fixed [42].

C. Frequency Uncertainty of Received Radio Signals

NIST does not certify or maintain tolerances on the received frequency uncertainty of its radio stations. The actual uncertainty can vary considerable depending upon the measurement technique, the type of receiver and antenna used, and environmental conditions. With this in mind, the following sections provide examples of the measurement uncertainties that can be typically expected.

1. Received Frequency Uncertainty of WWV and WWVH

The frequency uncertainty of WWV and WWVH signals as received is limited by the propagation effects of HF radio, which is a much noisier medium than LF radio or signals broadcast by satellite. In theory, much of this propagation noise could be removed or reduced by averaging. However, in practice, this usually isn't possible. Another limitation of HF radio signals is that it is usually not possible for a receiver to stay locked to the same broadcast for a duration long enough to average down the noise. Therefore, most frequency measurements made with WWV and WWVH are "instantaneous" measurements, or spot checks of the frequency of inexpensive quartz oscillators.

WWW/WWVH frequency calibration techniques have been extensively documented in other NIST publications [73, 74, 38]. Audio frequency calibrations typically have uncertainties of parts in 10^4, but the oscilloscope pattern drift method has been shown to be capable of measuring the audio frequency tones (such as 500 Hz) with an uncertainty of 1×10^{-6} [73]. Most calibrations of standard frequency oscillators, such as the time base oscillators found in radio receivers or test equipment, are made using a variation of the "beat frequency" technique, where the output frequency of an oscillator (the device under test or DUT) is mixed with the frequency of the RF carrier. This generates a beat frequency that represents the difference between the two frequencies, or the DUT frequency offset. In some cases, the DUT is adjusted until the beat frequency is no longer detectable, the condition known as "zero beat." The simplest form of these measurements produces an audio beat note that is usually listened to with headphones or "viewed" on the signal strength meter of a receiver [75]. If the 10 MHz carrier is used, and we assume that the operator can hear an audio beat note down to about 20 Hz, this limits the frequency uncertainty to about 2×10^{-6}. Ways of electronically detecting the beat note obviously work better and have been described by customers [76, 77], but generally it is difficult to detect anything smaller than 0.1 Hz (1×10^{-8} at 10 MHz). For this reason, 1 Hz (1×10^{-7}) is often thought of as the practical limit for an instantaneous measurement.

There are no dedicated WWV/WWVH receivers marketed as frequency standards, but some commercially available models do have the ability to produce a 1 pps timing signal. This signal is derived from the receiver's local quartz oscillator, and coarsely synchronized using the broadcast information. A measurement was performed at NIST in Boulder using one such receiver, and using a time interval counter to compare the 1 pps signal to UTC(NIST). Five minute averages were recorded for a period of six days (Figure 5.11). The receiver used for the test scans all of the available transmission frequencies and locks to the frequency with the best reception. The receiver provides no indication when it changes frequencies, and it is not

known at any given time whether the 1 pps is locked to the incoming signal, or coasting using its internal quartz oscillator. Therefore, some of the phase changes in Figure 5.11 are due to these factors and not to WWV path delay changes. The phase varies by a few milliseconds peak-to-peak, suggesting that a frequency uncertainty of $< 1 \times 10^{-9}$ could be obtained using a receiver of this type over a measurement interval of several days.

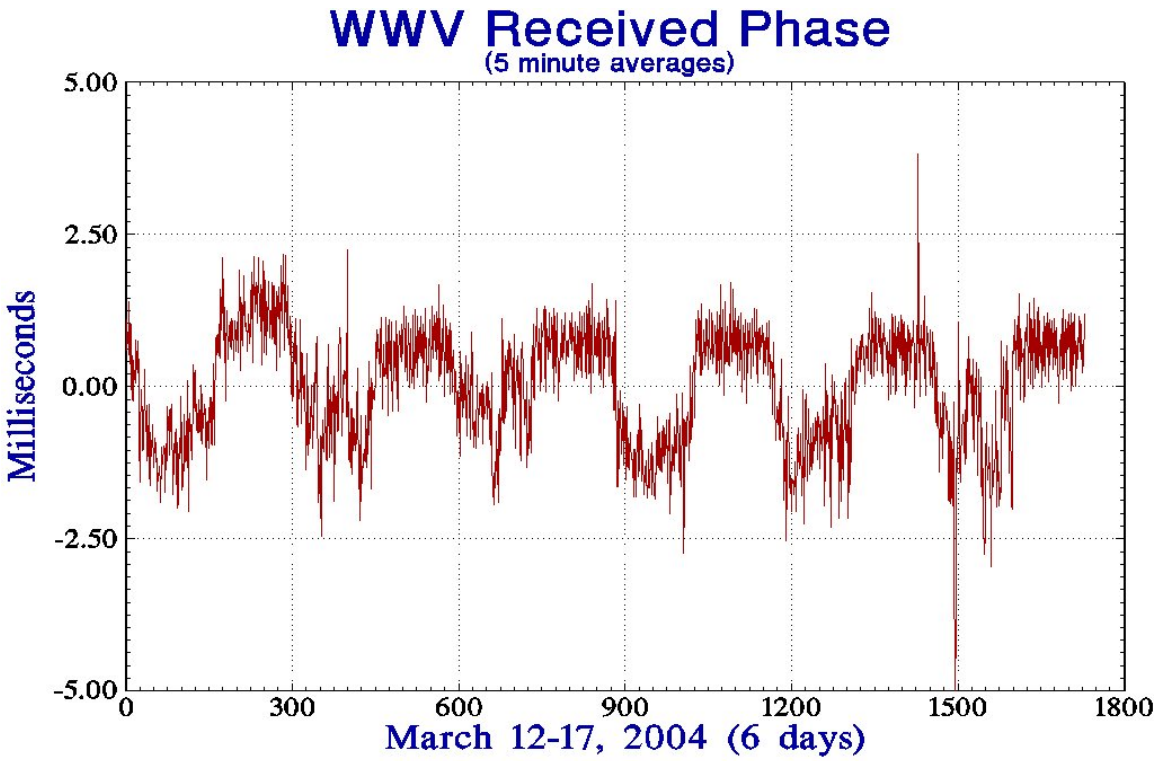

Figure 5.11. WWV phase comparison using 1 pps output from commercial timing receiver.

Obtaining the best possible frequency measurement results with a standard communication receiver would involve tuning to the same WWV/WWVH frequency at approximately the same time each day (when propagation conditions are similar), making a measurement, and averaging the measurement results over multiple days. This technique has been used to produce measurement uncertainties of parts in 10^{10} when comparisons were continued for about one month [73]. Parts in 10^{10} represents perhaps the "best case" received frequency uncertainty of WWV/WWVH, as it would be difficult for a customer to prove smaller uncertainties (even over very long averaging times) due to the instability of HF radio propagation.

2. Received Frequency Uncertainty of WWVB

Like other LF radio signals, the frequency uncertainty of the WWVB signal is partially a function of the length of the path between the transmitter and receiver. Long paths tend to be noisier, have larger diurnal delay changes at sunrise and sunset, and are more prone to cycle

slips. The quality of the receiving antenna and receiver also impacts the received frequency uncertainty. A receiver selective enough to filter out interference from other LF sources, and sensitive enough to stay locked to the same cycle of the carrier will obviously produce the best results.

The WWVB carrier is continuously tracked at the NIST Boulder, Colorado laboratories using several carrier phase tracking receivers, and the output of these receivers are compared to UTC (NIST). Cycle slips are rare over this short path (about 80 km), and the diurnal phase shift that

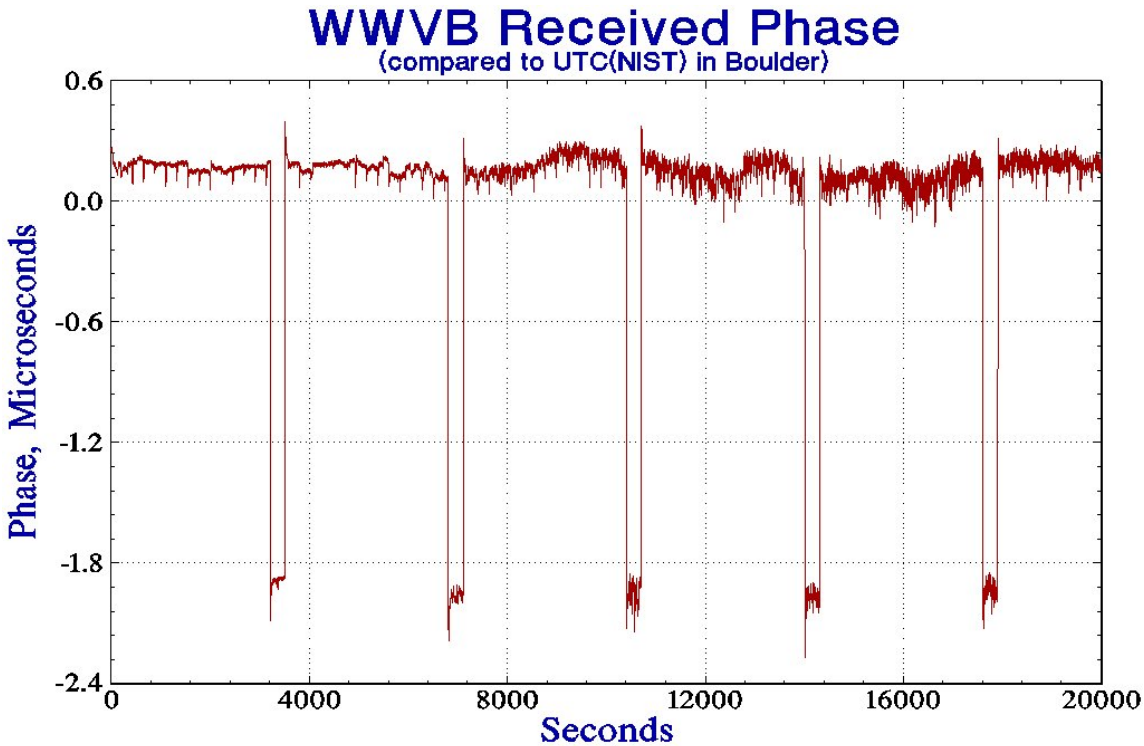

Figure 5.12. WWVB received phase compared to UTC(NIST) for 20000 s.

occurs at sunrise and sunset is typically less than 1 µs. A larger problem than the diurnal when using WWVB for short term frequency measurements is the phase signature of the station, which is signaled by advancing the carrier phase 45° for 5 minutes each hour This results in a phase shift of approximately 2.1 µs occurring at 10 minutes after each hour, and lasting until 15 minutes after the hour [38]. Figure 5.12 shows WWVB phase as recorded for 20000 s (5 h, 33 min, 20 s) during the daylight hours in Boulder. Note that the phase signature is clearly visible every hour. If frequency calibrations are made using a WWVB receiver and a chart recorder, these phase shifts can be useful, since they serve as hour markers on the strip chart. However, if a 1 pps output from a WWVB receiver is used as a frequency calibration reference on a time interval measurement system, it is important to average over periods long enough to average out the effects of the phase signature. This is illustrated in the Allan deviation plot shown in

Figure 5.13, using the same set plotted in Figure 5.12. Note the sharp drop in the graph at an averaging time of exactly 1 h. This illustrates that the frequency stability improves dramatically if data are averaged for 1 h (or more even multiples of an hour) since that guarantees that the entire 5 minute long phase shift is included in the data and therefore is averaged out.

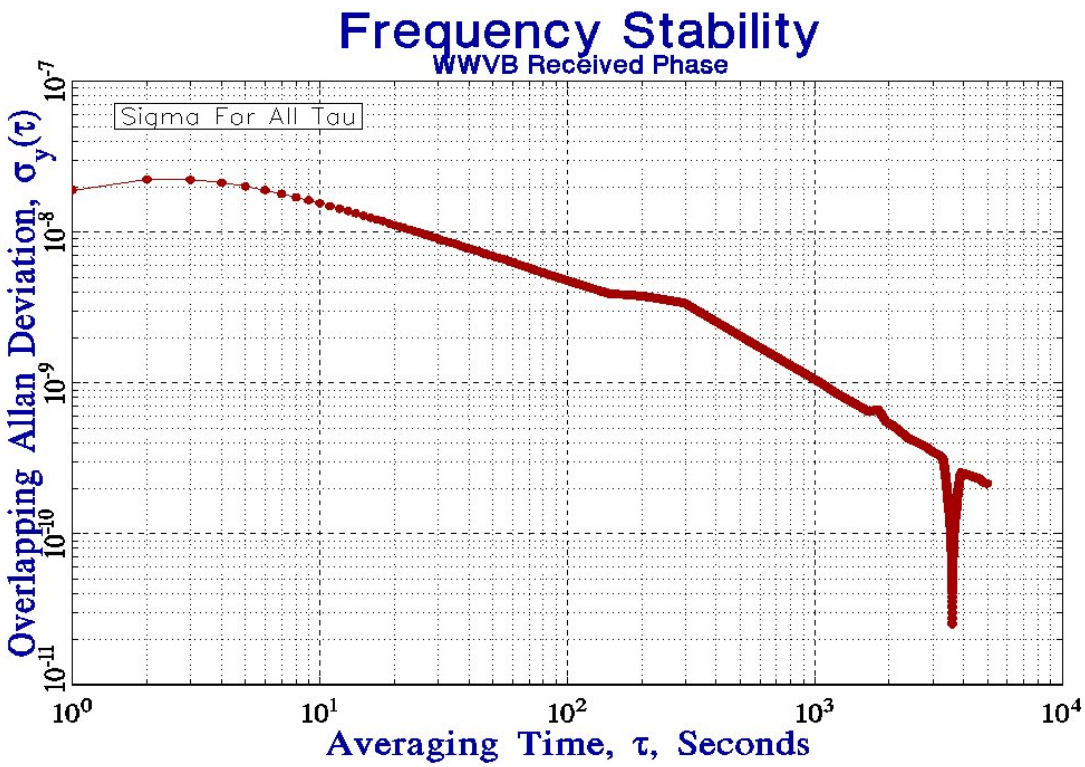

Figure 5.13. Estimated short-term frequency stability of WWVB carrier phase receiver.

Figure 5.14 shows WWVB received phase recorded over an entire month (each data point is a 1 h average). A close look at the phase data reveals the diurnal variations at sunrise and sunset, which typically have an amplitude of 500 ns or less over the 80 km path between Boulder and Fort Collins, an amplitude that can be expected to increase over a longer path. The peak-to-peak variation for the entire month is about 1.2 μs. The frequency stability as estimated by the Allan deviation, $\sigma_y(\tau)$, reaches 2.6×10^{-12} at an averaging time of 1 d as shown in Figure 5.15. This indicates that the frequency instability of the WWVB disciplined oscillator used for this measurement is approximately 30 times larger than that of a high quality GPS disciplined oscillator [61], but the uncertainties are still sufficiently low to calibrate all time base oscillators found in test and measurement equipment. Therefore, a WWVB disciplined oscillator can serve as a backup or alternative to a GPS disciplined oscillator as a frequency standard for calibration laboratories.

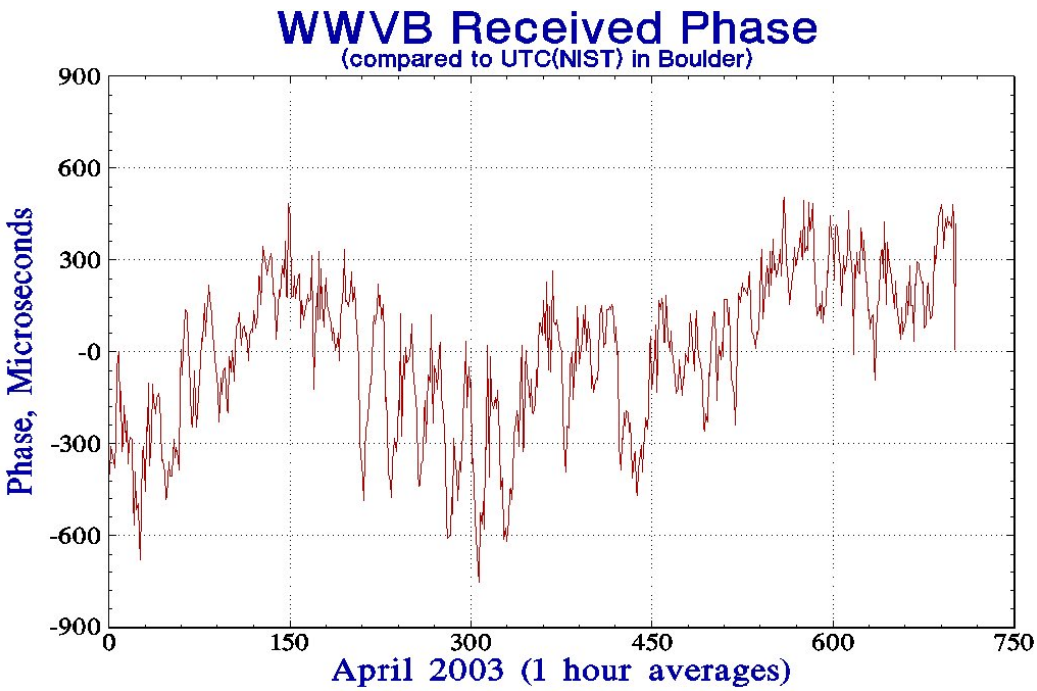

Figure 5.14. WWVB received carrier phase data for April 2003.

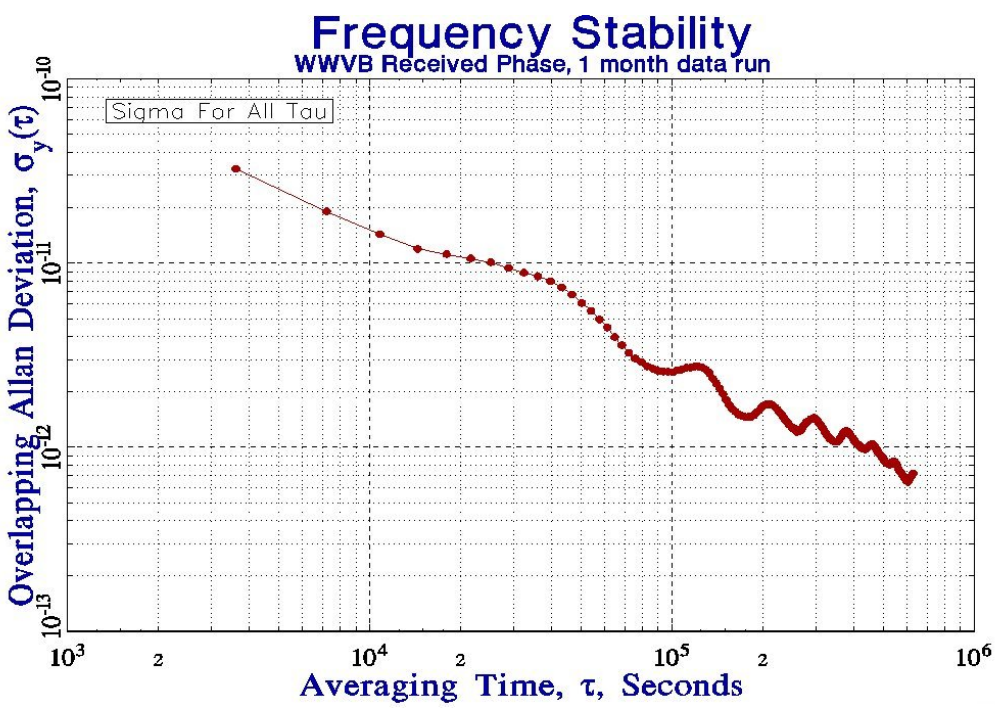

Figure 5.15. Estimated long-term frequency stability of WWVB carrier phase receiver.

D. Time Uncertainty of Received Radio Signals

The NIST radio stations are used primarily for time-of-day information, since most applications requiring precise time synchronization now rely on GPS, which can provide time synchronization uncertainties much smaller than 1 µs, whereas the practical limit for the NIST stations is typically about 1 ms. This section takes a brief look at the time synchronization uncertainty of the received NIST radio signals, and the factors that limit the uncertainty. It also discusses their measurement uncertainties when used as a time interval reference.

1. Received Time Uncertainty of WWV and WWVH

In the 1950's, prior to the availability of LF and satellite timing signals, WWV and WWVH were routinely used for time synchronization experiments and remote clock comparisons, and uncertainties as small as 0.1 ms were reported under "ideal" conditions [78]. These measurements required considerable effort, including detailed studies of HF propagation, particularly knowing how many times the signal was refracted off the ionosphere as it traveled the path between the transmitter and receiver. Several methods of using the signals for time synchronization with uncertainties of < 1 ms have been described in detail in previous NBS/ NIST publications [73, 74]. These methods require the audio output of a shortwave receiver, an oscilloscope, knowledge of the propagation delay, and in some cases, other pieces of standard test equipment. The OTM is synchronized with the start of the 5 ms duration tone (1000 Hz on WWV, 1200 Hz on WWVH) that occurs every second. This tone, known as the seconds tick, is preceded by 10 ms of silence and followed by 25 ms of silence. The silence before and after the pulses makes it easier to identify the seconds tick (Figure 2.6).

Once better time transfer signals became available and atomic clocks were introduced, little attention was paid to HF signals as a precision time synchronization source. The fundamental limitations of HF signals made them unsuited for synchronizing the best clocks [58], and better results could be obtained with less effort using other techniques. Today, most customers who use WWV or WWVH for time synchronization have modest requirements, and make no attempt to calibrate the signal path. Since the signals travel at the speed of light, the time is late by roughly 3.3 ms per 1000 km of signal path. For customers within the continental United States or near Hawaii, this means that the time uncertainty should be < 15 ms. If a customer chooses to calibrate the path delay, they can use software that computes the distance between the transmitter and their receiver. Even then, the practical limit for this path delay estimate is about 1 ms, and customers would need to be aware of changing HF propagation conditions to consistently obtain 1 ms uncertainty over all but the shortest paths. Therefore, customers who depend upon 1 ms time synchronization would probably choose another signal source.

WWV and WWVH are still commonly used as references for time interval measurements, particularly by state and industrial metrology laboratories that calibrate stopwatches and timers, since they supply the only precision audio time signals available in the United States. The audio tones from the stations are used as the signal to manually start and stop the device under test, and the uncertainty contributed by WWV/WWVH is insignificant when compared to human reaction time [57].

2. Received Time Uncertainty of WWVB

Since WWVB signals are primarily groundwave, the signal path is much more stable than the skywave path followed by WWV/WWVH signals. The biggest difficulty with using WWVB for time synchronization is the identification of the OTM, which has a long exponential decay time (Figure 5.10). The OTM is the first cycle transmitted after the 10 dB power drop, but selecting this cycle is a difficult task for the receiver, particularly if the signal amplitude is constantly changing. Commercially available receivers that synchronize a 1 pps signal to WWVB have a considerable problem with cycle ambiguity, in other words, they are likely to identify a different cycle as the OTM each time the receiver is turned on and off. A simple test performed at NIST in 2003 measured the 1 pps timing output of a commercial WWVB receiver versus UTC(NIST) using a time interval counter. The receiver was turned off, turned back on, and allowed to lock to the signal before the measurement was made. This process was repeated about 30 times. The peak-to-peak OTM variation was about ±30 cycles (±500 μs). This same receiver has a switch setting that allows the customer to calibrate the signal path, but with a resolution of just 1 ms, which is understandable due to the cycle selection ambiguity. If the receiver is left on it might stay locked to the same cycle for many days or weeks, but the simple test described above suggests that the OTM might be in error by as much as 500 μs, even if the customer has calibrated the path.

If a receiver with an RF output is available, the signal can be viewed on an oscilloscope, and the location of the OTM can be more precisely determined [74]. A detailed 1968 study of the OTM identification problem presented measurements of the WWVB OTM from Boulder, and of the OTM from the Swiss station HBG (75 kHz) as received in Brussels. The uncertainty limitation for time transfer was identified as ±40 μs, or about ±2.5 cycles in the case of WWVB [79] which is similar to the ±2 cycle ambiguity figure published elsewhere [74]. An informal experiment performed in 2003 at NIST in Boulder showed a cycle ambiguity of about ±1 cycle (±16.67 μs) when a receiver was turned off and allowed to reacquire the signal 20 times, using a modern digital oscilloscope with a Δt function. Even so, when you consider the WWVB station delays (Table 5.2), plus the delays in the receiver and the receiving antenna which are often unknown and difficult to calibrate, it seems that ±100 μs is probably the practical uncertainty limit for WWVB time synchronization, or about a factor of 10 better than the practical limit of the HF broadcasts.

E. Time Uncertainty of Telephone Time-of-Day Service

The telephone time-of-day services (TTDS) from WWV and WWVH are used to obtain time-of-day messages, or as a measurement reference for time interval measurements, such as the calibrations of stop watches and timers [57]. The signals are not suitable for use as a frequency reference.

The uncertainty of the time-of-day message is essentially equal to the delay through the telephone circuits (type B uncertainty), since the variation in the delay (type A uncertainty) is relatively small during a phone call. However, the time received by the customer is always late by some amount. Callers in the continental United States using “land lines” or ordinary

telephone service can expect a signal delay of less than 30 ms, but callers using cellular telephones may encounter a delay of more than 100 ms.

There is a possibility that an overseas call, for example, a call from Hawaii to the continental United States, will be routed through a satellite, and if so, the roundtrip delay through a geostationary satellite is at least 250 ms, and the actual delay might approach 500 ms. However, there is a good chance that overseas calls will be routed by undersea cables, since the newer undersea fiber optic lines have greatly improved the bandwidth and it is actually cheaper to send telephone signals thru the fiber optic undersea cable than via satellite. To test this, a measurement was made at WWVH that compared the telephone time-of-day audio from WWV to that of WWVH. Channel one of an oscilloscope was connected to the telephone system, and channel two was connected to the audio output from a WWVH time code generator. A total of 30 calls were then made to the WWV telephone time-of-day system, 15 in the morning, and an additional 15 in the afternoon. The delay ranged from 54 to 63 ms, so all calls were obviously routed through undersea cables instead of satellites. Figure 5.16 illustrates one of these measurements, where the delay was measured at 54.4 ms.

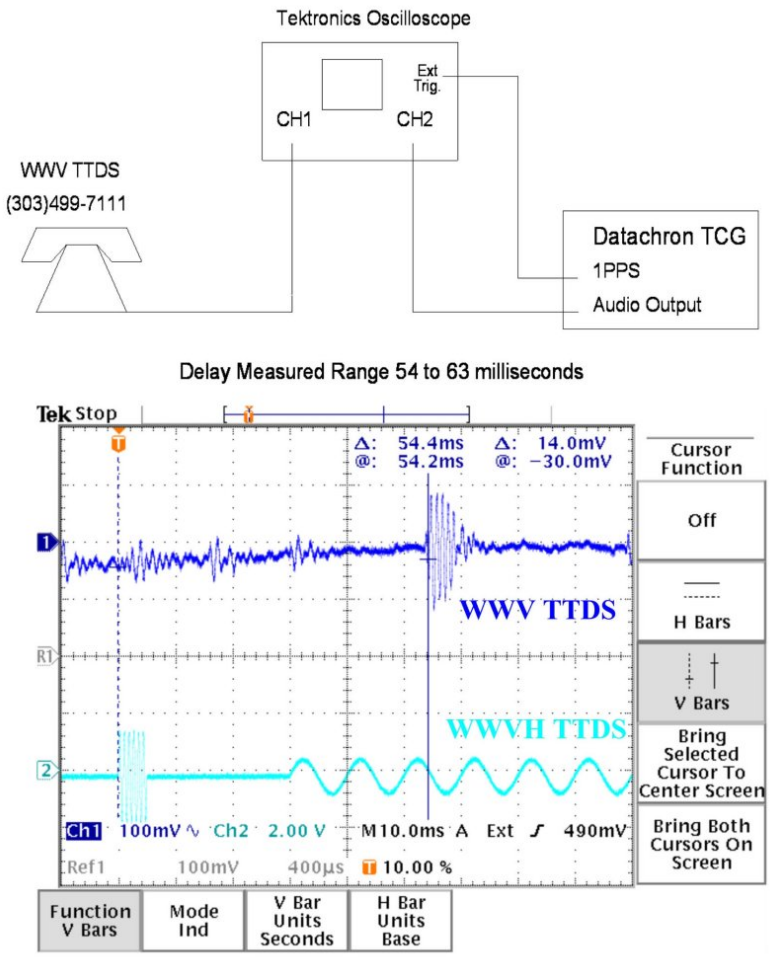

Figure 5.16. Measured telephone line delay between WWVH and WWV.

Measurements of short time intervals made during a single phone call are concerned only with the type A uncertainty, i.e., the stability of a telephone line (the variations in the delay) during the call. The absolute delay of the time message does not matter in this case. A NIST study

Table 5.3. Summary of measurement uncertainties.

Measurement Quantity	Type A (1 d average)	Type B
WWV/WWVB transmitted frequency	1×10^{-13}	$< 1 \times 10^{-13}$
WWVH transmitted frequency	2×10^{-13}	$< 1 \times 10^{-13}$
WWV/WWVH transmitted time	< 100 ns	< 60 μs
WWVB transmitted time	< 100 ns	< 20 μs
WWV/WWVH received frequency	1×10^{-9}	1×10^{-10}
WWVB received frequency	$\sim 5 \times 10^{-12}$	$< 1 \times 10^{-12}$
WWV/WWVH received time	< 1 ms	1 ms *
WWVB received time	< 1 μs	100 μs *
Telephone transmitted time	< 100 ns	< 100 μs
Telephone received time (landline)	1 ms	< 30 ms

* when corrected for path delay

involving the Automated Computer Time Service (ACTS) [36, 38], a service that sends a digital time code over telephone lines, showed phone line stability at $\tau = 1$ s to be better than 0.1 ms over both a local phone network, and a long distance network between Boulder, Colorado and WWVH in Kauai [80]. While it is not possible to guarantee this stability during all phone calls, it is probably safe to say that the 2σ stability should be much less than 1 ms during a typical call, which are limited to about 3 minutes in length.

The type B uncertainty does matter when longer time intervals are measured with two phone calls; a typical scenario during stopwatch calibrations, where the watch might be run for several hours. For example, the first call is made to obtain the signal to start the stopwatch, and the second call is made to obtain the signal to stop the stopwatch [57]. If both calls are routed through the same phone circuit, the delay through the circuit (type B uncertainty) should be the same for both calls. In practice, the delays will not be identical, and a "time step" will be introduced. However, the customer can normally assume that the time step will be a few milliseconds or less in magnitude.

F. Summary of Measurement Uncertainties

Table 5.3 includes estimates of the station and telephone time signal uncertainties as transmitted and as received, based on the information presented in the previous sections of Chapter 5. The Type A uncertainties are 2σ values obtained using the Allan deviation or a similar statistic. They are essentially equivalent to the stability of the broadcasts at an averaging time of 1 d. The Type B uncertainties are systematic. They are related to the

accuracy of the broadcast with respect to UTC(NIST), and are obtained by non statistical means, such as adding together the various components of station delays. The combined measurement uncertainty can be thought of as the Type B uncertainty, plus or minus the Type A uncertainty.

G. Establishing Traceability to UTC(NIST)

The time and frequency broadcasts described in this booklet are referenced to and controlled by UTC(NIST), the United States national standard for time and frequency. Therefore customers can use the NIST broadcasts to establish traceability through UTC(NIST) back to the International System of units (SI). In order to establish traceability, customers must document each link of the traceability chain and specify the uncertainty for each link [81, 38]. The uncertainty information provided in this chapter and summarized in Table 5.3 can be used as a guideline when estimating the uncertainty of the various links, but the actual uncertainties will vary depending upon the receiving equipment and the calibration methods used. Figure 2.1 illustrates the part of the traceability chain that extends from the SI second down to the NIST time and frequency services, including the radio stations described in this publication.

References

[1] W. F. Snyder and C. L. Bragaw, Acheivement in Radio: Seventy Years of Radio Science, Technology, Standards and Measurement at the National Bureau of Standards, Natl. Inst. Stand. Technol. Spec. Publ. 555, October 1986, 863 pp.

[2] J. H. Dellinger, Reducing the Guesswork in Tuning, Radio Broadcast **16**, 241-245, December 1923. (available at: http://tf.nist.gov/general/pdf/757.pdf)

[3] H. J. Walls, The Standard Frequency Set at WWV, QST **8**(10), 9-12, October 1924. (available at: http://tf.nist.gov/general/pdf/1054.pdf)

[4] R. T. Cox, Standard radio wavemeter, Bureau of Standards type R70B, J. Opt. Soc. Amer. **6**, 162-168, March 1922. (available at: http://tf.nist.gov/general/pdf/730.pdf)

[5] E. L. Hall, The Standard Wavemeters of the Bureau of Standards, Sibley J. Eng. **38** (5), 123-126, May 1924. (available at: http://tf.nist.gov/general/pdf/1053.pdf)

[6] J. H. Dellinger, The Status of Frequency Standardization, Proc. IRE **16**, 579-592, May 1928. (available at: http://tf.nist.gov/general/pdf/1604.pdf)

[7] H. H. Henline, The Pacific Coast Standard Frequency Station 6XBM, QST **9**, 26, November 1925.

[8] Possible discontinuance of radio signal transmission of standard frequency, Radio Service Bull. No. 109, **13**, April 1926. (available at: http://tf.nist.gov/general/pdf/1906.pdf)

[9] L. Mickey and A. D. Martin, Development of Standard Frequency Transmitting Sets, Nat. Bur. Stand. (U. S.) J. Res. **12**, 1-12, January 1934. (available at: http://tf.nist.gov/general/pdf/1616.pdf)

[10] Uses of Transmissions of Standard Radio Frequencies, Nat. Bur. Stand. (U. S.) Letter Circ. 335, October 1932, 18 pp. (available at: http://tf.nist.gov/general/pdf/1613.pdf)

[11] J. H. Dellinger and E. L. Hall, Radio dissemination of the national standard of frequency, Radio Engineering **12**, 23, May 1932. (available at: http://tf.nist.gov/general/pdf/1907.pdf)

[12] W. D. George, WWV Standard Frequency Broadcasts, FM and Television **7**, 25-27, 44, June 1947. (available at: http://tf.nist.gov/general/pdf/1625.pdf)

[13] T. Jones, Splitting the Second: The Story of Atomic Time, Institute of Physics Publishing, Bristol, UK (2000), pp. 123-126.

[14] Experimental Timing Code Added to WWV Broadcasts, NBS Tech. News Bull. **44**, 114-115, July 1960. (available at: http://tf.nist.gov/general/pdf/1670.pdf)

[15] Changes in WWV/WWVH Standards Broadcasts, Nat. Bur. Stand. (U.S.) Tech. News Bull. **45**, 11-13, January 1961. (available at: http://tf.nist.gov/general/pdf/1684.pdf)

[16] NBS Frequency and Time Broadcast Services, Nat. Bur. Stand. (U.S.) Spec. Publ. 236, July 1971, 17 pp. (available at: http://tf.nist.gov/general/pdf/1771.pdf)

[17] Y. Beers, WWV moves to Colorado, Parts I and II, QST, 11-14, January 1967, 30-36, February 1967. (available at: http://tf.nist.gov/general/pdf/271.pdf)

[18] Improvements in the NBS Primary Standard of Frequency, Nat. Bur. Stand. (U.S.) Tech. News Bull. **37**, 8-12, January 1953. (available at: http://tf.nist.gov/general/pdf/1636.pdf)

[19] G. H. Lester, Experimental Standard-Frequency Transmitting Station, WWVH, Communications **29**, 20-23, September 1949. (available at: http://tf.nist.gov/general/pdf/1629.pdf)

[20] Improvements in Standard Frequencies Broadcast by Radio Stations WWV and WWVH, Nat. Bur. Stand. (U.S.) Tech. News Bull. **40**, 37-38, March 1956. (available at: http://tf.nist.gov/general/pdf/1641.pdf)

[21] Standard Frequency and Time Signals from NBS Stations WWV and WWVH, Nat. Bur. Stand. (U.S.) Misc. Publ. 236, July 1961, 8 pp. (available at: http://tf.nist.gov/general/pdf/1681.pdf)

[22] Standards Frequency and Time Services of the National Bureau of Standards, Nat. Bur. Stand. (U.S.) Misc. Publ. 236, January 1965, 12 pp. (available at: http://tf.nist.gov/general/pdf/1718.pdf)

[23] New WWVH Facility, Nat. Bur. Stand. (U.S.) Tech. News Bull. **54**, 137, June 1970. (available at: http://tf.nist.gov/general/pdf/1767.pdf)

[24] L. Fey, New Signals from an Old Timer … WWV, Broadcast Engineering **13**, 44-46, July 1971. (available at: http://tf.nist.gov/general/pdf/479.pdf)

[25] W. D. George, Low Frequency Standards Transmissions, Proc. 1957 Frequency Control Symposium, (April 1957), 574-585. (available at: http://tf.nist.gov/general/pdf/1535.pdf)

[26] Experimental Standard Frequency Broadcast on 60 Kilocycles, Nat. Bur. Stand. (U.S.) Tech. News Bull. **41**, 99-100, July 1957. (available at: http://tf.nist.gov/general/pdf/1649.pdf)

[27] New Standard Frequency Broadcasts, Nat. Bur. Stand. (U.S.) Tech. News Bull. **44**, 120-121, July 1960. (available at: http://tf.nist.gov/general/pdf/1671.pdf)

[28] B. E. Blair and A. H. Morgan, Control of WWV and WWVH Standard Frequency Broadcasts by VLF and LF Signals, Nat. Bur. Stand. (U.S.) Radio Sci. J. Res. **69D**, 323-336, July 1965. (available at: http://tf.nist.gov/general/pdf/1724.pdf)

[29] New Facilities Dedicated for WWVB and WWVL, Nat. Bur. Stand. (U.S.) Tech. News Bull. **47**, 178-180, October 1963. (available at: http://tf.nist.gov/general/pdf/1707.pdf)

[30] J. M. Richardson, Establishment of New Facilities for WWVL and WWVB, Nat. Bur. Stand. (U.S.) Radio Sci. J. Res. **68D**, 135, January 1964. (available at: http://tf.nist.gov/general/pdf/1710.pdf)

[31] R. Brown, Fort Collins Becoming World's Time Center, Fort Collins Coloradoan, 8A, November 7, 1965.

[32] WWVB adds Time Code to Broadcast, NBS Tech. News Bull. **50**, 15-16, January 1966. (available at: http://tf.nist.gov/general/pdf/1731.pdf)

[33] M. Deutch, D. W. Hanson, G. Nelson, C. Snider, D. Sutton, W. Yates, P. M. Hansen, and B. Hopkins, WWVB Improvements: New Power From An Old Timer, Proc. 1999 Precise Time and Time Interval Meeting (PTTI), December 1999, 523-535. (available at: http://tf.nist.gov/general/pdf/1406.pdf)

[34] P. P. Viezbicke, NBS Frequency-Time Broadcast Station WWV, Fort Collins, Colorado, Nat. Bur. Stand. (U.S.) Tech. Note 611, October 1971, 33 pp. (available at: http://tf.nist.gov/general/pdf/1420.pdf)

[35] Valcom Limited, Valcom Antenna Installation Manual, Guelph, Ontario, Canada, 2000.

[36] J. Levine, M. A. Lombardi, and A. N. Novick, NIST Computer Time Services: Internet Time Service (ITS), Automated Computer Time Service (ACTS), and time.gov Web Sites, Natl. Inst. Stand. Technol. Spec. Publ. 250-59, May 2002, 79 pp. (available at: http://tf.nist.gov/general/pdf/1551.pdf)

[37] M. A. Lombardi, Remote Frequency Calibrations: The NIST Frequency Measurement and Analysis Service, Natl. Inst. Stand. Technol. Spec. Publ. 250-29, June 2004, 90 pp. (available at: http://tf.nist.gov/general/pdf/1950.pdf)

[38] M. A. Lombardi, NIST Time and Frequency Services, Natl. Inst. Stand. Technol. Spec. Publ. 432, January 2002, 80 pp. (available at: http://tf.nist.gov/general/pdf/1383.pdf)

[39] Timing Committee, Telecommunications and Timing Group. IRIG Serial Time Code Formats. Secretariat, Range Commanders Council, U.S. Army White Sands Missile Range, New Mexico. IRIG Standard 200-98, May 1998. 51 pp.

[40] Stewart, J. W. Navy Electricity and Electronics Training Series (NEETS), Module 10: Introduction to Wave Propagation, Transmission Lines, and Antennas. Naval Education and Training Program Development Center, Pensacola, Florida. 1983 ed., 191 pp.

[41] Collins Radio Company. Broadband HF Monopole Antenna, Model 437C Instruction Book. Collins Radio Company, Dallas Division, Dallas, Texas. June 1964. 46 pp.

[42] P. M. Hansen and J. Birkett, WWVB Year 2000: Post Upgrade Baseline, Space and Naval Warfare Systems Center (SSC San Diego) Technical Report 1833, December 2003, 46 pp.

[43] P. M. Hansen and D. Gish, WWVB Post Repair: Antenna Performance Measurement, Space and Naval Warfare Systems Center (SSC San Diego) Technical Report 1834, December 2003, 32 pp.

[44] P. M. Hansen and D. Gish, WWVB Antenna and Antenna Tuning System: Baseline Measurements, Naval Command, Control and Ocean Surveillance Center, RDT&E Division. Tech. Rep. 1693, February 1995, 66 pp.

[45] Rough estimates obtained from BBC and Voice of America reports about shortwave radio listenership.

[46] Data compiled from correspondence with leading manufacturers of radio controlled clock components.

[47] J. B. Milton, WWVB/WWVL Field Studies, Nat. Bur. Stand. (U.S.) Rep. 9725, March 1969, 131 pp. (available at: http://tf.nist.gov/general/pdf/458.pdf)

[48] P. M. Hansen and D. Gish, WWVB Baseline Measurements: Summary, Findings and Recommendations, Naval Command, Control and Ocean Surveillance Center, RDT&E Division. Tech. Rep. 1692, February 1995, 26 pp.

[49] J. M. Birkett, Technique for Building and Calibration VLF/LF Receive Loop Antennas, Naval Command, Control and Ocean Surveillance Center, RDT&E Division. Tech. Rep. 1742, April 1997, February 1995, 25 pp.

[50] J. A. Barnes and R. E. Beehler, Report on the 1975 Survey of Users of the Services of Radio Stations WWV and WWVH, Nat. Bur. Stand. (U.S.) Tech. Note 674, October 1975, 93 pp. (available at: http://tf.nist.gov/general/pdf/189.pdf)

[51] International Telecommunication Union (ITU), Standard Frequencies and Time Signals, Reports of the CCIR, 1990: Annex to Volume VII, Geneva, 1990, 89-100.

[52] J. P. Lowe, Results of 2001 Customer Satisfaction Survey, September 2001. (available at: http://tf.nist.gov/survey/survey.htm)

[53] C. W. Stevens, Los Angeles County Taps Atomic Clock to Improve the Timing of Its Stoplights, Wall Street Journal, November 7, 1988.

[54] Radio Navigation Aids, Natl. Imagery and Mapping Agency (NIMA) Pub. 117, 2002.

[55] A. S. Risley, The National Measurement System for Time and Frequency, Nat. Bur. Stand. (U.S.) Spec. Publ. 445-1, June 1976, 74 pp. (available at: http://tf.nist.gov/general/pdf/88.pdf)

[56] The International Occultation Timing Association (IOTA) web site. (available at http://www.lunar-occultations.com/iota)

[57] J. C. Gust, R. M. Graham, and M. A. Lombardi, Stopwatch and Timer Calibrations, Natl. Inst. Stand. Technol. Spec. Publ. 960-12, May 2004, 60 pp. (available at: http://tf.nist.gov/general/pdf/1930.pdf)

[58] J. T. Stanley, The Use and Limitations of HF Standard Broadcasts for Time and Frequency Comparisons, Proc. 1972 Precise Time and Time Interval Meeting (PTTI), November 1972, 249-258. (available at: http://tf.nist.gov/general/pdf/534.pdf)

[59] R. R. Stone, Jr., Synchronization of Local Frequency Standards with VLF Transmissions, Proc. 1962 IEEE Frequency Control Symposium, 227-240.

[60] G. Kamas and M. A. Lombardi, Time and Frequency User's Manual, Natl. Inst. Stand. Technol. Spec. Publ. 559, September 1990, 164 pp. (available at: http://tf.nist.gov/general/pdf/461.pdf)

[61] M. A. Lombardi, L. M. Nelson, A. N. Novick, and V. Z. Zhang, Time and Frequency Measurements Using the Global Positioning System (GPS), Cal Lab Int. J. Metrology **8,** 26-33, July-September 2001. (available at: http://tf.nist.gov/general/pdf/1424.pdf)

[62] Federal Communications Commission Rule 73.1545.

[63] Standard Musical Pitch, NBS Tech. News Bull. **41**, 120-121, August 1957. (available at: http://tf.nist.gov/general/pdf/1650.pdf)

[64] D. W. Allan and F. H. Brzoticky, Calibration of Police Radar Instruments, Report of the 60th National Conference on Weights and Measures, Natl. Bur. Stand. Spec. Publ. 442, May 1976, 42-47. (available at: http://tf.nist.gov/general/pdf/87.pdf)

[65] W. L. Young, Legal Calibration (Certification) of Police Traffic Control Devices, Proc. 1998 Natl. Conf. Stand. Lab., 199-201.

[66] R. L. Fey, J. B. Milton, and A. H. Morgan, Remote Phase Control of Radio Station WWVL, Nature **193**, 1063-1064, March 1962. (available at: http://tf.nist.gov/general/pdf/477.pdf)

[67] Commercial Television Aids NBS Standard Broadcasts, NBS Tech. News Bull. **53**, 111, May 1969. (available at: http://tf.nist.gov/general/pdf/1757.pdf)

[68] D. W. Allan and M. A. Weiss, Accurate Time and Frequency Transfer During Common-View of a GPS Satellite, Proc. 1980 IEEE Frequency Control Symposium, 334-346. (available at: http://tf.nist.gov/general/pdf/192.pdf)

[69] D. D. Davis, M. A. Weiss, A. J. Clements, and D. W. Allan, Construction and Performance Characteristics of a Prototype NBS/GPS Receiver, Proc. 1981 IEEE Frequency Control Symposium, 546-552. (available at: http://tf.nist.gov/general/pdf/558.pdf)

[70] D. W. Hanson, Fundamentals of Two-Way Time Transfers by Satellite, Proc. 1989 IEEE Frequency Control Symposium, 174-178. (available at: http://tf.nist.gov/general/pdf/836.pdf)

[71] J. B. Milton, Standard Time and Frequency: Its Generation, Control, and Dissemination by the National Bureau of Standards, Nat. Bur. Stand. (U.S.) Tech. Note 656, June 1974, 25 pp. (available at: http://tf.nist.gov/general/pdf/948.pdf)

[72] NIST Time and Frequency Bulletins are available at: http://tf.nist.gov/pubs/bulletin/timescaleindex.htm

[73] N. Hironaka and C. Trembath, The Use of National Bureau of Standards High Frequency Broadcasts for Time and Frequency Calibrations, Nat. Bur. Stand. (U.S.) Tech. Note 668, May 1975, 49 pp. (available at: http://tf.nist.gov/general/pdf/453.pdf)

[74] G. Kamas and S. L. Howe, Time and Frequency User's Manual, Nat. Bur. Stand. (U.S.) Spec. Publ. 559, November 1979, 256 pp. (available at: http://tf.nist.gov/general/pdf/1792.pdf)

[75] J. J. Carr, Elements of Electronic Instrumentation and Measurement, Prentice Hall, New Jersey, 3rd ed., (1996), pp. 439-440.

[76] R. Evans, A Laboratory-Grade 10-MHz Frequency Standard, QEX, 13-21, May/June 2002.

[77] W. F. Bain, Simple Skywave Frequency Calibration Approaching One Part-Per-Billion, QEX, 19-22, June 1996.

[78] A. H. Morgan, Precise Time Synchronization of Widely Separated Clocks, Nat. Bur. Stand. (U.S.) Tech. Note 22 , July 1959, 72 pp. (available at: http://tf.nist.gov/general/pdf/1659.pdf)

[79] D. H. Andrews, C. Chaslain, J. DePrins, Reception of Low Frequency Time Signals, Frequency **6** (9), 13-21, September 1968. (available at: http://tf.nist.gov/general/pdf/1749.pdf)

[80] D. W. Allan, D. D. Davis, J. Levine, M. A. Weiss, N. Hironka, and D. Okayama, New Inexpensive Frequency Calibration Service from NIST, Proc. 1990 IEEE Frequency Control Symposium, 107-116. (available at: http://tf.nist.gov/general/pdf/889.pdf)

[81] M. A. Lombardi, Traceability in Time and Frequency Metrology, Cal Lab Int. J. Metrology **6,** 33-40, September-October 1999. (available at: http://tf.nist.gov/general/pdf/1305.pdf)