Proceedings of the Institute of Radio Engineers
Volume 17, Number 2 *February, 1929*

A SYSTEM FOR FREQUENCY MEASUREMENTS BASED ON A SINGLE FREQUENCY*

By

E. L. Hall

(Radio Section, Bureau of Standards, Washington, D. C.)

Summary—*The method here described is suitable for calibration of either piezo oscillators or frequency meters in terms of an accurately standardized temperature controlled piezo oscillator. A radio-frequency generator is adjusted and maintained at 10 kc in terms of the standard piezo oscillator. The correct adjustment of this generator is shown by a special form of beat indicator which gives both visible and audible indication of the frequency difference between the piezo oscillator and a harmonic of the 10-kc generating set. A second auxiliary generator may then be set to a harmonic of the 10-kc generating set, such as some frequency assignment in the broadcasting band. The correct setting of the auxiliary generator is also determined by means of the special beat indicator. The piezo oscillator to be tested will usually be found to give an audible note in the telephone receivers connected to it. The audible note represents the difference in frequency between the piezo oscillator and the auxiliary generating set. The frequency difference is determined by comparison with a calibrated audio-frequency generator.*

A SIMPLE method of measuring the frequency of a piezo oscillator is to adjust a radio-frequency generator so that it has the same frequency as the piezo oscillator to be tested, and then measure the frequency of the generator in terms of a calibrated frequency meter. This measurement can be repeated at several harmonics if desired, and the fundamental frequency of the piezo oscillator determined in terms of several coils of the frequency meter. In the method here described, the frequency of the piezo oscillator is determined in terms of an accurately known frequency standard, and the result is not dependent upon the calibration of a frequency meter as an intermediate step in the measurement.

At the time work was begun on the development of this system, in March, 1928, the procedure followed in testing a piezo oscillator for a broadcasting station consisted in determining when the quartz plate was adjusted to the frequency assigned to the station. As the frequency assignments end in

* Dewey decimal classification: R210. Original manuscript received by the Institute, November 19, 1928. Publication approved by the Director of the Bureau of Standards of the U. S. Department of Commerce.

tens between 550 and 1500 kc, it is apparent that an electrical system giving harmonics spaced 10 kc apart could be used to give the desired frequencies without final measurement upon a frequency meter of extreme precision and accuracy.

A radio-frequency generator for 10 kc can readily be constructed using a vacuum tube. The output of such a generator has a large number of harmonics which may be used in measurements at frequencies many times the fundamental. A generator of this type, however, cannot be relied upon to maintain its frequency adjustment accurately enough for use as a standard, in terms of which standards for broadcasting stations are to be adjusted. A piezo oscillator, however, will maintain its frequency with a high degree of precision if it is maintained at a constant temperature. A temperature-controlled piezo oscillator is therefore a desirable standard to use in maintaining a 10-kc generator accurately upon its frequency.

The system herein described is best explained by reference to Fig. 1 which shows schematically the apparatus as used.

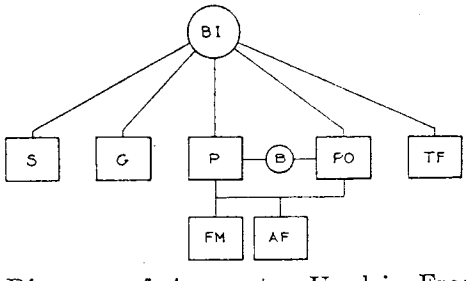

Fig. 1—Schematic Diagram of Apparatus Used in Frequency Measurements. *S*—temperature-controlled piezo oscillator; *G*—10-kc generator; *P*—adjustable frequency power generator; *PO*—piezo oscillator to be tested; *TF*—electrically driven tuning fork; *FM*—frequency meter; *AF*—audio-frequency generator; *BI*—aural and visual beat indicator; *B*—beat indicator.

The system includes: a temperature-controlled piezo oscillator *S*, the frequency of which is accurately known, in terms of which the measurements are made; a 10-kc vacuum-tube generating set *G*, capable of very precise frequency control and giving a very constant frequency; a radio-frequency vacuum-tube generating set *P*, covering the range of frequencies desired; the piezo oscillator to be calibrated, *PO*; an electrically-driven tuning fork of known frequency, *TF*; a calibrated frequency meter, *FM*, for determination of the order of the harmonic of generator *P* in terms of generator *G*; a calibrated audio-frequency generator *AF*, capable of precise adjustment; a special form of com-

bined beat indicator and generating detector *BI*, by means of which the operator maintains the various elements of the system in the frequency relationship desired; a beat indicator, *B*, which can be used for adjusting the piezo oscillator *PO* precisely to the frequency or harmonic of generator *P*.

In brief, the general method of operating the apparatus is as follows. The frequency of the 10-kc generator *G* is controlled manually by changing the setting of a very small variable condenser and is held at a frequency a harmonic of which produces "zero beat" with the fundamental or a harmonic of the standard piezo oscillator *S*. This condition is determined by means of a beat indicator *BI*. The power generator *P* is then set so that it is at zero beat with a suitable harmonic of the generator *G*, as indicated by beat indicator *BI*. After this adjustment generator *P* is operating at the required frequency. The piezo oscillator to be tested is then adjusted to give zero beat with generator *P* as indicated by beat indicator *B*. The frequency meter *FM* is used only to determine the order of the harmonics or to measure frequency differences. The adjustment of the piezo oscillator is based directly on a standard piezo oscillator.

The low-frequency generator *G* is a Bureau of Standards Type O auxiliary generator described in Letter Circular 187,[1] with the addition of a number of fixed condensers and a small two-plate variable air condenser. This generator employs a type 201-A tube. It was found that by using one of the largest coils and an additional capacity of about 0.012 μf, a frequency of 10 kc could be obtained. After enclosing the generator in a box to eliminate sudden temperature changes due to air currents, it was found to hold its frequency adjustment very satisfactorily. The beat indicator circuits give audible indication of the slightest frequency shift. Three different piezo oscillators with frequencies of 25, 100, and 200 kc have been used at different times as the standard in terms of which the 10-kc generator was adjusted.

In order to emphasize some of the merits of the method, reference is made to Fig. 2, which gives a diagram of the connections for a simple beat indicator where the outputs of the two generators *G* and *H* are led into the indicator circuits having

[1] Specifications for portable auxiliary generator, Bureau of Standards Type O, Bureau of Standards Letter Circular 187.

coupling coils C and E, crystal detector D, and milliammeter A. Whenever generators G and H have nearly the same frequency or a simple harmonic relation exists between their frequencies, the pointer of the milliammeter A will vibrate, indicating the frequency difference or error in the harmonic relationship. Fre-

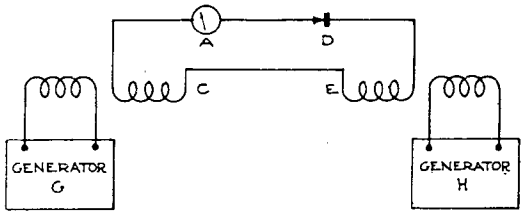

Fig. 2—Circuit for Simple Beat Indicator which Operates When Generator G Is Nearly Adjusted to Frequency or A Harmonic of Generator H.

quency differences up to a few cycles per second can be observed with the milliammeter of the beat indicator, Fig. 2. A careful adjustment of the frequency of one of the generators will then cause the pointer to vibrate more and more slowly until its deflection does not change. While very precise frequency adjustments can be made in this manner, there may be some tendency for the frequency of the standard to be changed slightly, because of the presence of the coupled indicating circuit. Efforts were made to eliminate the possibility of errors of this type, which lead to the beat indicator shown in Fig. 3.

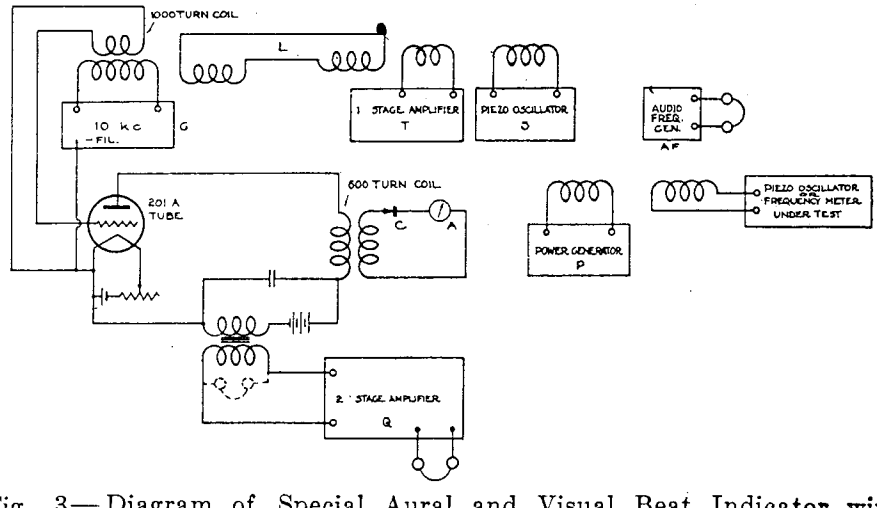

Fig. 3—Diagram of Special Aural and Visual Beat Indicator with Associated Apparatus Used in Frequency Measurements.

This indicator gives visible indications on the milliammeter A with very loose coupling between the standard frequency

generator S and the low-frequency generator G. When a shielded piezo oscillator is employed at S, Fig. 3, a one-stage radio-frequency amplifier and the link circuit L are required. The use of this form of coupling does not affect the frequency of the piezo oscillator S.

Essentially the beat indicator circuit shown in Fig. 3 is a generating detector circuit. A 1000-turn honeycomb coil in the grid circuit couples to the generator G and to the output of the piezo oscillator S. A 600-turn coil in the plate circuit couples to a coil of 8 or 10 turns in series with a crystal detector and d.c. microammeter A, which gives the visible indication. An audio-frequency transformer is connected in the plate circuit as shown. Telephone receivers or a two-stage amplifier are connected to the secondary winding of the transformer.

To operate the beat indicator the approximate setting of the 10-kc generator is first found by listening in the telephones connected in the plate circuit of the 10-kc generator or as shown by the dotted lines, in which case the two-stage amplifier would be disconnected, or by listening in telephones in the output of the amplifier. After adjusting the 10-kc generator to zero beat, with the telephones connected to the output of the amplifier, a rather faint high note may be heard, or, if the power generator, P, Fig. 3, is operating near some harmonic of the 10-kc generator rapid pulsations in the beat note between the two generators are heard. This renders it much easier to adjust the 10-kc generator correctly. By careful adjustment of the tuning control of the 10-kc generator this high note will fluctuate in intensity, and when the fluctuation becomes slow enough the pointer of the milliammeter A will be found to vibrate in step with the fluctuation. By further adjustment of the tuning control the pointer can be kept from moving. At this point the 10-kc generator G can be shifted by further slight adjustment so that there is either a high-pitched faint note or absolute quiet. The latter condition occurs when the generator is correctly adjusted with respect to the frequency standard used. If the generator gets out of adjustment by as much as one cycle in a minute, the operator will detect it by hearing the high-pitched note appear in the telephones. Slight errors in this setting may not be important unless a high order harmonic is to be used. Errors in adjustment of the order of a few hundredths of a cycle are immediately apparent and the generator can be readjusted.

The sensitiveness of the visible beat indicator is shown by the fact that when the coils of an unshielded piezo oscillator and 10-kc generator were coaxial and from two to three feet apart, visible beats of the beat indicator milliammeter *A* (Fig. 3) were readily obtained. Type 201-A tubes were used in both the piezo oscillator and the 10-kc generator. The link circuit *L* was not used in this case. In other words, the coupling to the piezo oscillator *S* was extremely loose, which meant that there was no danger of the frequency of the piezo oscillator (which was used as the standard) being changed by the other circuits. Thus the beat indicator system could not affect the frequency of the standard.

Having adjusted the 10-kc generator accurately, the next step is to adjust the third generator, *P*, in Fig. 3,called the power generator, to the desired harmonic of the 10-kc generator. A vacuum-tube detector and amplifier and coil system coupling the two generators would give beat notes in telephones connected in the output circuit of the amplifier, but it has been found unnecessary to add this extra circuit when working up to 1500 kc using a 10-kc fundamental. The telephones in the two-stage amplifier *Q* in Fig. 3 will also serve to indicate the correct adjustment of the power generator. When working at the higher frequencies in the broadcast band, beats which otherwise would not be heard are made audible by placing a pick-up coil and the phone leads in the vicinity of the power generator.

The frequencies of the power generator ending in tens of kilocycles give a zero beat which cannot be set accurately by aural methods because of the uncertainty of the setting for true zero beat. The frequencies ending in 2 1/2, 5, and 7 1/2 can be set accurately by matching beat notes in the telephone receivers, which are beats of beats.

Although the 10-kc points cannot be set precisely, they can be accurately determined by matching a beat note in the phones with a corresponding note from a tuning fork. If the frequency of the fork is known, it is only necessary to make the measurement on one side of zero beat. If this method is adopted, great care is necessary to insure that the desired fork frequency is used, as the measurement may be made by matching the generator beat note with a submultiple or harmonic of the tuning fork. In order to guard against this error it has been found convenient to make an approximate zero beat measurement first.

Then a measurement is made with the tuning fork by detuning the generator so that the frequency heard in the telephones due to the beat note between the 10-kc generator and the generator is the same as that of the tuning fork. It is necessary that the frequency meter used have sufficient resolving power to show an easily read difference in the condenser settings for these two frequencies, and the curves should be large enough to allow a correct determination of what harmonic of the fork is used.

If it is desired to prepare an enlarged frequency meter curve, it is evident from the above paragraph that a large number of points can be obtained for the calibration over as small a frequency range as 10 kc. Assuming that a 400-cycle electrically-driven tuning fork is available, in the range from 200 to 210 kc, for example, the following points could be very accurately determined using the beat notes 199.200, 199.600, 200.400, 200.800, 202.500, 204.600, 205.000, 205.400, 207.500, 209.200, 209.600, 210.400, and 210.800. These thirteen points permit the drawing of a large accurate curve.

The circuits described above have been used for calibration purposes between 40 kc and 1500 kc, and beat notes have been obtained up to 2500 kc, spaced 10 kc apart. In the lower part of the frequency range beat notes were obtained 2500 cycles apart when using a 25-kc piezo oscillator and a 10-kc fundamental from generator *G*.

The measurement of the frequency of a piezo oscillator can be made by the method described with the addition of an accurate audio-frequency generator. For example, suppose the frequency of a piezo oscillator is to be accurately measured, and it is known that its frequency is approximately 600 kc. The power generator *P* of Fig. 3 is set to the sixtieth harmonic of the 10-kc generator as determined by a common type of frequency meter. Then when listening in the phones of the piezo oscillator a beat note will, in general, be heard, which is the difference between the frequency of the piezo oscillator and the generator. This beat note is matched by a similar note from the audio-frequency generator, from the calibration of which the audio frequency is determined. Whether this audio-frequency is to be added to or subtracted from 600 kc is determined by listening in the piezo oscillator telephones and noting whether the frequency of the power generator must be increased or decreased to pro-

duce zero beat. Check measurements can be made at other harmonics or subharmonics of the piezo-oscillator frequency.

It has been found desirable for checking purposes to take a reading on a frequency meter of high resolving power at the time that the audio-frequency beat note measurement is made. A certain frequency value is obtained from the calibration of the frequency meter. Generator *P* is then adjusted to zero beat with the piezo oscillator under test, and another reading taken on the frequency meter. These two frequency meter readings give a frequency difference which serves as a check on the frequency measured with the audio-frequency generator, and also indicates whether the frequency as determined by the latter generator is to be added to or subtracted from the frequency as given by generator *P*, which, as previously stated, is based on the standard piezo oscillator.

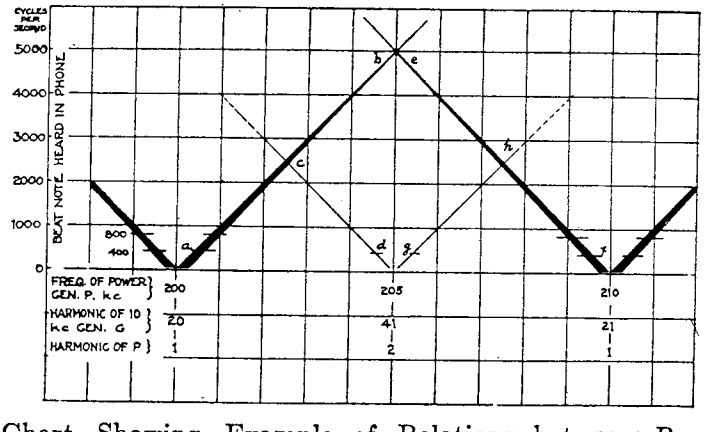

Fig. 4—Chart Showing Example of Relations between Beat Notes Heard in the Special Beat Indicator Telephones, with the Harmonics of Generators *G* and *P* Indicated.

The frequency of a quartz plate mounted in an adjustable mounting can readily be altered to the desired value by setting the power generator to the correct harmonic and then adjusting the quartz plate mounting to give zero beat. A beat indicator can be brought into use for a more accurate adjustment than is possible by use of the telephones alone.

Fig. 4 illustrates how the various beat notes heard in the telephones can be interpreted, i.e., whether the frequency to which the power generator is set ends in 10 or in some other number. The diagonal lines represent the beat notes heard in the phones, and the breadth of the line its relative strength. Thus it is seen that the beat notes occurring near the frequencies

ending in 10 are very loud or strong. Zero beat being indefinite, a setting is taken by matching with the note from an electrically-driven tuning fork as described above. Increasing the frequency of the power generator from 200 kc, for example, as indicated in Fig. 4, the beat note gradually gets higher and fainter, line *ab*, until at a frequency of the order of 204.5 kc the beat note is quite high, but a lower note, line *cd*, will also be heard which becomes lower as the other becomes higher. Soon after the low note has become silent the high note will be heard to pulsate, and, with critical adjustment of the generator, beats with another beat note will be heard which permit a very accurate setting of the generator. This setting gives one of the 5-kc points and is readily distinguished over a range of several hundred kilocycles by the aural method described. If the frequency of the power generator is increased further the other high-frequency beat note, line *ef*, becomes lower and stronger, and a weaker beat note, line *gh*, becomes higher and fainter. Further change in the power generator brings in a loud beat note and finally silence or zero beat in the telephones. This is another 10-kc point. The beat note represented at *b* is 5000 cycles when a 10-kc fundamental is used. When changing the frequency of the power generator from *a* to *b*, if conditions are right, another beat note may be heard at *c* and a precise setting made at this point which will be midway between the 10-kc point and the 5-kc point. This setting is more difficult to obtain than the 5-kc point because it is indicated by the beats between two 2500-cycle notes of much different intensities. When using a piezo oscillator having a fundamental frequency of 25 kc, the 2500-cycle notes are readily distinguishable. Other beat notes may be heard and can be set accurately but may not be readily usable. Points 5 kc apart are much closer than are usually required.

An explanation of the various beat notes heard in the phones can be given by further reference to Fig. 4 where harmonic numbers are indicated for the three zero-beat frequencies given. The 200-kc frequency or fundamental of the power generator beats with the twentieth harmonic of the 10-kc generator, and the 210-kc fundamental of the power generator beats with the 21st harmonic of the 10-kc generator. When the frequency used is 205 kc, the second harmonic of the power generator, or 410 kc, beats with the 41st harmonic of the 10-kc generator.

As previously explained, the 202.5-kc and 207.5-kc points are obtained by listening to the beats between the beat notes heard in the phones. Beat notes other than those indicated in Fig. 4 may be heard in the phones, but those described are usually more than are required for calibration purposes.

While this system or method was intended chiefly for calibration of piezo oscillators, it has been found to be ideal for frequency meter calibration work. The system has the following advantages:

(1) Extreme accuracy and precision obtainable.
(2) Large number of calibration points possible.
(3) Flexibility and ease of operation.
(4) Ease of working up final results from experimental data.

With reference to (1), the accuracy with which the frequency of the standard is known and maintained will determine the accuracy with which the measured frequencies can be determined, because of the extreme precision possible in working with beat notes. This precision is far in excess of even specially built frequency meters. While the 10-kc generator is not held automatically to its frequency, yet the characteristics of the circuit are such that the operator is immediately aware of any change in its frequency and can readjust it.

Item (2) above is important because the system permits calibration of piezo oscillators for broadcasting stations for any frequency in the broadcasting band. It extends the usefulness of a standard piezo oscillator since it allows the exact setting of many harmonics which could not be obtained from the piezo oscillator alone. This fact is of great importance in the calibration of special frequency meters capable of extreme precision and having high resolving power such as one used in the radio laboratory of the Bureau of Standards. The large number of calibration points possible can be seen from the example cited above. This fact also adapts the circuits to the measurement of the frequency of any piezo oscillator by final measurement of an audio frequency by means of an audio-frequency generator.

With reference to (3), after the apparatus is correctly adjusted it is very easy to operate and adapts itself to any frequency calibration. The frequencies to be adjusted can be spaced uniformly as desired by setting what has been called the 10-kc generator to frequencies other than 10 kc, such as 5 kc, 15 kc,

20 kc, 25 kc, etc. For example, it may be that points spaced 100 kc apart are desired. The 10-kc generator in that case would be set to 100 kc.

With reference to (4), data on frequency meter calibration can be worked up and results obtained almost by inspection if the frequency of the piezo oscillator used as a standard is such as to permit the setting of the 10-kc generator accurately on 10 kc, and provided the experimental data is carefully taken and the same procedure is used in matching the fork frequency. Ten-kc and 5-kc points are readily distinguished experimentally, and existing curves can be checked rapidly or corrected by adding 10 kc to successive 10-kc points starting from a known point. By adding 10 kc to successive 5-kc points starting at a known 5-kc point these frequencies are rapidly determined.